11-6625-3052-14

TM 11-6625-3052-14

TECHNICAL MANUAL

OPERATOR'S, ORGANIZATIONAL, DIRECT SUPPORT, AND GENERAL SUPPORT MAINTENANCE MANUAL

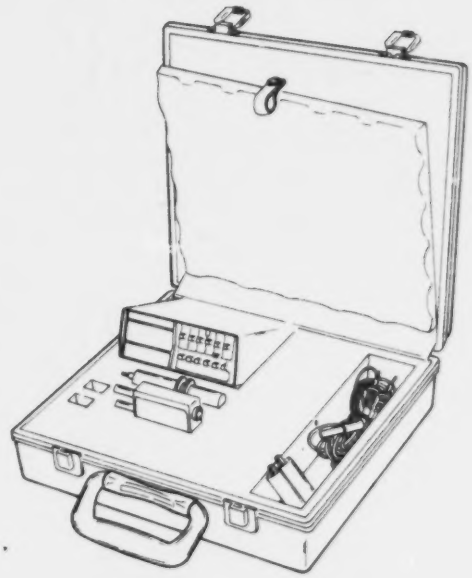

TABLE OF CONTENTS PAGE i

EQUIPMENT DESCRIPTION PAGE 1-3

OPERATING INSTRUCTIONS PAGE 2-1

OPERATOR'S MAINTENANCE INSTRUCTIONS PAGE 3-1

ORGANIZATIONAL MAINTENANCE INSTRUCTIONS PAGE 4-1

GENERAL SUPPORT MAINTENANCE INSTRUCTIONS PAGE 6-1

SUBJECT INDEX PAGE Index 1

MULTIMETER, DIGITAL AN/PSM-45

(NSN 6625-01-139-2512)

HEADQUARTERS, DEPARTMENT OF THE ARMY

10 JANUARY 1984

D 101. 11:

READEX FICHE best copy available

5 SAFETY STEPS TO FOLLOW IF SOMEONE IS THE VICTIM OF ELECTRICAL SHOCK

1. DO NOT TRY TO PULL OR GRAB THE INDIVIDUAL
2. IF POSSIBLE , TURN OFF THE ELECTRICAL POWER
3. IF YOU CANNOT TURN OFF THE ELECTRICAL POWER, PULL, PUSH, OR LIFT THE PERSON TO SAFETY USING A WOODEN POLE OR A ROPE OR SOME OTHER INSULATING MATERIAL
4. SEND FOR HELP AS SOON AS POSSIBLE
5. AFTER THE INJURED PERSON IS FREE OF CONTACT WITH THE SOURCE OF ELECTRICAL SHOCK, MOVE THE PERSON A SHORT DISTANCE AWAY AND IMMEDIATELY START ARTIFICIAL RESUSCITATION

WARNING

WARNING

HIGH VOLTAGE

MAY BE ENCOUNTERED DURING THE USE OF THIS EQUIPMENT

DEATH ON CONTACT

MAY RESULT IF PERSONNEL FAIL TO OBSERVE SAFETY PRECAUTIONS

Never work on electronic equipment unless there is another person nearby who is familiar with the operation and hazards of the equipment and who is competent in administering first aid. When the technician is aided by operators, he must warn them about dangerous areas.

A periodic review of safety precautions in TB 385-4, Safety Precautions for Maintenance of Electrical/Electronic Equipment, is recommended. When the equipment is operated with covers removed, DO NOT TOUCH exposed connections or components. MAKE CERTAIN you are not grounded when making connections or adjusting components inside the test instrument.

WARNING Do not be misled by the term "low voltage". Potentials as low as 50 volts may cause death under adverse conditions.

For Artificial Respiration, refer to FM 21-11.

WARNING

Adequate ventilation should be provided while using TRICHLOROTRIFLUOROETHANE. Prolonged breathing of vapor should be avoided. Do not use near heat or open flame; the products of decomposition are toxic and irritating. Since TRICHLOROTRIFLUOROETHANE dissolves natural oils, prolonged contact with the skin should be avoided. When necessary, use gloves, sleeves, and aprons which the solvent cannot penetrate. If the solvent is taken internally, consult a physician immediately.

WARNING

Compressed air shall not be used for cleaning purposes except where reduced to less than 29 pounds per square inch (psi) and then only with effective chip guarding and personnel protective equipment. Do not use compressed air to dry parts when TRICHLOROTRIFLUOROETHANE has been used. Compressed air is dangerous and can cause serious bodily harm if protective means or methods are not observed to prevent chip or particle (of whatever size) from being blown into the eyes or unbroken skin of the operator or other personnel.

WARNING

To avoid electrical shock, be extremely careful when making required measurements and adjustments. Serious injury or death may result from contact with the voltages within the range of this instrument.

WARNING

Do not attempt to use high voltage probe unless you are qualified to recognize shock hazards and trained in precautions necessary to prevent injury. Never work alone when making high voltage measurements. High voltage probe is designed for use in low power, high impedance circuits only. Do not attempt to use high voltage probe in high power circuits.

Technical Manual

No. 11-6625-3052-14

HEADQUARTERS
DEPARTMENT OF THE ARMY
Washington, DC, 10 January 1984

OPERATOR'S, ORGANIZATIONAL, DIRECT SUPPORT, AND GENERAL SUPPORT MAINTENANCE MANUAL

MULTIMETER, DIGITAL, AN/PSM-45
(NSN 6625-01-139-2512)

REPORTING ERRORS AND RECOMMENDING IMPROVEMENTS

You can help improve this manual. If you find any mistakes or if you know of a way to improve the procedures, please let us know. Mail your letter, DA Form 2028 (Recommended Changes to Publications and Blank Forms), or DA Form 2028-2 located in the back of this manual direct to: Commander, US Army Communications-Electronics Command and Fort Monmouth, ATTN: DRSEL-ME-MP, Fort Monmouth, New Jersey 07703.

In either case, a reply will be furnished direct to you.

			Page
		HOW TO USE THIS MANUAL	1-0
CHAPTER	1	INTRODUCTION	1-1
		Chapter Overview	1-1
Section	I	General Information	1-1
	II	Equipment Description	1-3
	III	Principles of Operation	1-13
CHAPTER	2	OPERATING INSTRUCTIONS	2-1
		Chapter Overview	2-1
Section	I	Description and Use of Operator's Controls and Indicators	2-1
	II	Operator Preventive Maintenance Checks and Services	2-5
	III	Operation Under Usual Conditions	2-7
CHAPTER	3	OPERATOR MAINTENANCE	3-1
		Chapter Overview	3-1
Section	I	Troubleshooting Procedures	3-1
	II	Maintenance Procedures	3-1
CHAPTER	4	ORGANIZATIONAL MAINTENANCE	4-1
		Chapter Overview	4-1
Section	I	Repair Parts, Special Tools, TMDE, and Support Equipment	4-1
	II	Service Upon Receipt	4-2
	III	Troubleshooting	4-5
	IV	Maintenance Procedures	4-8
	V	Preparation for Storage or Shipment	4-13

CHAPTER 5 DIRECT SUPPORT MAINTENANCE (Not Applicable)

6 GENERAL SUPPORT MAINTENANCE 6-1
Chapter Overview 6-1
Section I Repair Parts, Special Tools, TMDE, and Support Equipment 6-1
II Troubleshooting 6-1
III Maintenance Procedures 6-2

APPENDIX A REFERENCES A-1
B MAINTENANCE ALLOCATION B-1
C COMPONENTS OF END ITEM AND BASIC ISSUE ITEMS LISTS C-1
D ADDITIONAL AUTHORIZATION LIST D-1
E EXPENDABLE SUPPLIES AND MATERIALS LIST..... E-1

SUBJECT INDEX ..... Index 1

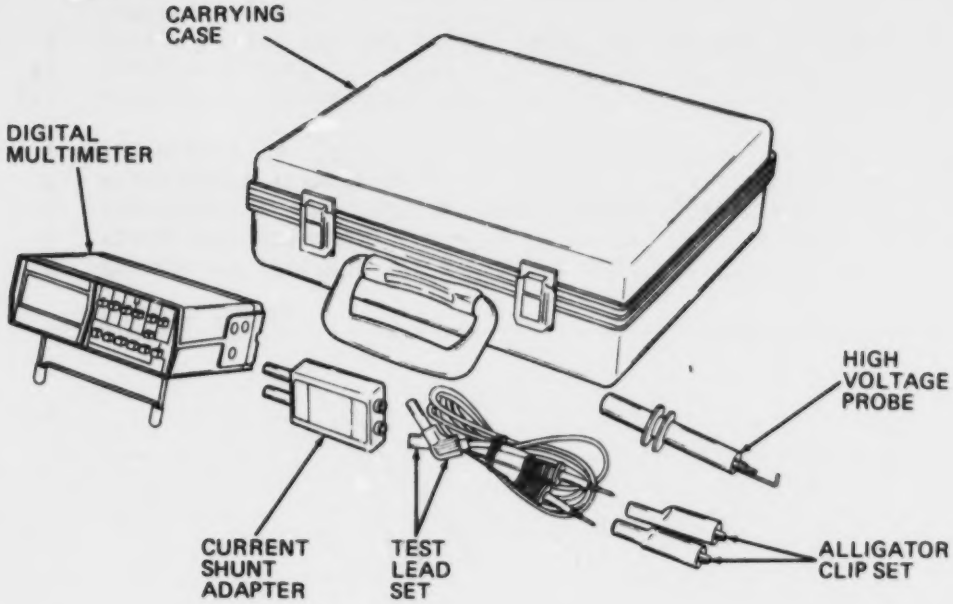

HOW TO USE THIS MANUAL

This manual tells you how to operate and maintain the AN/PSM-45. It is divided into chapters, sections, and appendixes.

The chapters contain general information, as well as operator's, organizational, and general support maintenance procedures. The maintenance procedures contained in this manual tell you several things:

- what tools you need to do the job
- materials or parts required
- equipment condition before starting work

In addition to text, you'll have either an assembled view or an exploded view illustration of the associated parts. The illustration is keyed to the text by numbers and shows you how to take the part off and put it on.

Within each chapter, paragraphs are numbered sequentially. If you are looking for specific information, use the subject index at the back of the manual to locate the paragraph where the topic is discussed.

CHAPTER 1
INTRODUCTION

CHAPTER OVERVIEW

The purpose of this chapter is to give you standard data required in all manuals, to familiarize you with the purpose and capabilities of the equipment, and to give you a brief description of the different components of the equipment.

	Paragraph
Scope	1-1
Consolidated Index of Army Publications and Blank Forms	1-2
Maintenance Forms, Records, and Reports	1-3
Destruction of Army Materiel to Prevent Enemy Use	1-4
Preparation for Storage or Shipment	1-5
Official Nomenclature, Names, and Designations	1-6
Reporting Equipment Improvement Recommendations (EIR)	1-7
List of Abbreviations	1-8
Equipment Characteristics, Capabilities, and Features	1-9
Location and Description of Major Components	1-10
Equipment Data	1-11
Multimeter Theory	1-12
High Voltage Probe Theory	1-13
Current Shunt Theory	1-14

Section I. GENERAL INFORMATION

1-1. SCOPE

a. Type of Manual: Operator's, Organizational, Direct Support, and General Support Maintenance.

b. Model Number and Equipment Name: Multimeter, Digital AN/PSM-45.

c. Purpose of Equipment: Measures resistance, AC and DC voltage, and AC and DC current.

1-2. CONSOLIDATED INDEX OF ARMY PUBLICATIONS AND BLANK FORMS

Refer to the latest issue of DA Pam 310-1 to determine whether there are new editions, changes, or additional publications pertaining to the equipment.

1-3. MAINTENANCE FORMS, RECORDS, AND REPORTS

a. Reports of Maintenance and Unsatisfactory Equipment. Department of the Army forms and procedures used for equipment maintenance will be those prescribed by TM 38-750, The Army Maintenance Management System (TAMMS).

b. Report of Packaging and Handling Deficiencies. Fill out and forward SF 364 [Report of Discrepancy (ROD)] as prescribed in AR 735-11-2/DLAR 4140.55/NAVMATINST 4355.73A/AFR 400-54/MCO 4430.3F.

1-3. MAINTENANCE FORMS, RECORDS, AND REPORTS (Continued)

c. Discrepancy in Shipment Report (DISREP) (SF 361). Fill out and forward Discrepancy in Shipment Report (DISREP) (SF 361) as prescribed in AR 55-38/ NAVSUPINST 4610.33C/AFR 75-18/MCO P4610.19D/DLAR 4500.15.

1-4. DESTRUCTION OF ARMY MATERIEL TO PREVENT ENEMY USE

To prevent enemy use of this equipment, refer to TM 750-244-2 for destruction of Army electronics materiel.

1-5. PREPARATION FOR STORAGE OR SHIPMENT

Paragraphs 4-11 and 4-12 give procedures for preparing AN/PSM-45 for storage or shipment.

1-6. OFFICIAL NOMENCLATURE, NAMES, AND DESIGNATIONS

Refer to the following cross-reference listing for official nomenclature and common names.

NOMENCLATURE CROSS-REFERENCE LIST

Common Name	Official Nomenclature
AN/PSM-45	Multimeter, Digital AN/PSM-45
multimeter	Digital Multimeter (55026) 10-864999
current shunt	Current Shunt Adapter (55026) 10-864941

1-7. REPORTING EQUIPMENT IMPROVEMENT RECOMMENDATIONS (EIR)

If your equipment needs improvement, let us know. Send us an EIR. You, the user, are the only one who can tell us what you don't like about your equipment. Let us know why you don't like the design. Put it on an SF 368 (Quality Deficiency Report). Mail it to Commander, US Army Communications-Electronics Command and Fort Monmouth, ATTN: DRSEL-ME-MP, Fort Monmouth, New Jersey 07703. We'll send you a reply.

1-8. LIST OF ABBREVIATIONS

Abbreviations used in this manual are listed below:

AC	alternating current
C	Celsius
CMRR	common-mode rejection ratio
COM.	common
DA	Department of the Army
dB	decibel
DC	direct current
ea	each
EIR	equipment improvement recommendation

1-8. LIST OF ABBREVIATIONS (Continued)

F	Fahrenheit
FSCM	Federal Supply Code for Manufacturer
Hz	Hertz
kHz	kiloHertz
kV	kilovolts
LCD	liquid crystal display
mA	milliamperes
MAC	maintenance allocation chart
MTOE	modified table of organization and equipment
mV	millivolts
NMRR	normal-mode rejection ratio
para	paragraph
pF	picoFarad
PMCS	preventive maintenance checks and services
psi	pounds per square inch
RMS	root mean square
SF	standard form
TAMMS	The Army Maintenance Management System
TB	technical bulletin
TM	technical manual
TMDE	test, measurement, and diagnostic equipment
TOE	table of organization and equipment
uA	microamperes
UUT	unit under test
uV	microvolts
V	volts

Section II. EQUIPMENT DESCRIPTION

1-9. EQUIPMENT CHARACTERISTICS, CAPABILITIES, AND FEATURES

a. Characteristics

- Measures resistance, AC and DC voltage, and AC and DC current.
- Makes percent modulation and signal tracing measurements.
- Detects logic pulses.
- Rapidly indicates current or voltage levels, allowing nulling and peaking measurements.

b. Capabilities and Features

- Small, lightweight, and battery powered for portability.
- True RMS circuitry for accurate AC measurements.

1-9. EQUIPMENT CHARACTERISTICS, CAPABILITIES, AND FEATURES (Continued)

- 3-1/2 digit LCD (liquid crystal display) for easy reading.
- 22-segment bargraph display offers advantages of analog meter.
- Pushbutton power, function, and range switches simplify operation.

1-10. LOCATION AND DESCRIPTION OF MAJOR COMPONENTS

a. Carrying Case. Rigid case with hinged cover houses and protects remaining components listed below.

b. High Voltage Probe. Plastic probe with spring clip extends voltage range of multimeter to 5000 volts AC or DC. Screws onto threaded end of red test lead.

c. Current Shunt. Encapsulated adapter extends current range of multimeter to 10 amperes AC or DC. Mounts between test leads and multimeter input jacks.

d. Test Leads. One black and one red insulated, flexible wire lead. Each test lead has an angled plug at one end for connection to multimeter, and a probe tip at remaining end for connection to circuit under test.

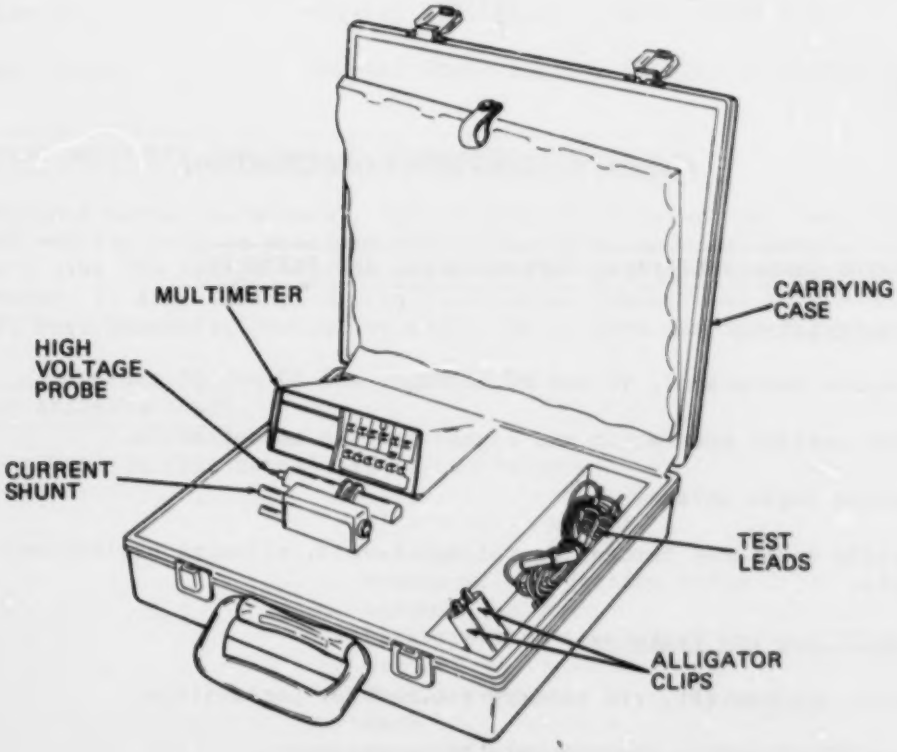

1-10. LOCATION AND DESCRIPTION OF MAJOR COMPONENTS (Continued)

e. Alligator Clips. One red and one black insulated, spring-loaded clip. Clips screw onto threaded probe tip of test leads, freeing your hands during measurements.

f. Multimeter. High-performance instrument with basic 0.1% DC voltage accuracy designed for field and laboratory use. True rms circuitry provides accurate measurements for both sinewave and nonsinewave inputs. Features include pushbutton function and range switching, easy-to-read 3-1/2 digit LCD including analog bargraph and low battery indicator, single battery operation for portability, and overload protection.

1-11. EQUIPMENT DATA

WEIGHTS AND DIMENSIONS

Carrying Case	
Weight	2.3 pounds
Height	4 inches
Width	12-3/4 inches
Depth	
(handle folded)	12-3/8 inches
(handle extended)	14-1/2 inches
Multimeter	
Weight	1.5 pounds
Height	2 inches
Width	5.63 inches
Depth	4.6 inches
High Voltage Probe	
Weight	1.3 ounces
Length (overall)	5-1/4 inches
Current Shunt	
Weight	2.1 ounces
Height	3/4 inch
Width	1.91 inches
Length (excluding connectors)	3-3/4 inches

ENVIRONMENTAL

Temperature Range	
Operating	+32 to +131 degrees F
Storage	-40 to +158 degrees F
Relative Humidity	
Up to +95 degrees F	90% maximum
Up to +131 degrees F (noncondensing)	70% maximum
Multimeter Temperature Coefficient	
At +32 to +64 degrees F and +82 to +131 degrees F	less than 0.1 times applicable accuracy specification per degree C

1-11. EQUIPMENT DATA (Continued)

MULTIMETER TECHNICAL DATA

NOTE

Specifications are valid at +18 to +28 degrees C (+64 to +82 degrees F) with relative humidity up to 90 percent unless otherwise noted.

DC Voltage

Range	Maximum display	Accuracy
200 mV	±199.9	±(0.1% of input + 1 count) all ranges
2 V	±1.999	
20 V	±19.99	
200 V	±199.9	
1000 V	±1000	

Overload protection ..... ±1000 VDC + peak AC on all ranges

Input resistance ..... 10 megohms on all ranges

Sensitivity ..... 100 uV on 200 mV range

Response time ..... 1 second to within rated accuracy

NMRR ..... 50 dB minimum at 50/60 Hz

CMRR (with 1000 ohm unbalance) ..... 120 db minimum at 50/60 Hz and DC

1-11. EQUIPMENT DATA (Continued)

MULTIMETER TECHNICAL DATA (Continued)

AC Voltage (True RMS, AC Coupled)

Range	Maximum display	Accuracy		
		20 to 40 Hz	40 Hz to 1 kHz	1 kHz to 5 kHz
200 mV	199.9	±(1.5% of input + 5 counts)	±(0.5% of input + 5 counts)	±(5.0% of input + 5 counts)
2 V	1.999			
20 V	19.99			
200 V	199.9			
750 V	750		to 400 Hz only	not specified

Overload protection ..... 750 V RMS (1000 VDC + peak AC, limited to 10^7 V-Hz) on all ranges

Input impedance ..... 10 megohms shunted by less than 100 pF on all ranges

Sensitivity ..... 100 uV on 200 mV range

Response time ..... 3 seconds to within rated accuracy

Crest factor ..... 3:1 at full scale

Typical extended frequency response (except 750 V range) ..... ±1 dB, 5 kHz to 20 kHz; ±3 dB, 20 kHz to 100 kHz

1-11. EQUIPMENT DATA (Continued)

MULTIMETER TECHNICAL DATA (Continued)

DC Current

Range	Maximum display	Accuracy	Burden voltage (maximum)
200 uA	±199.9	±(0.5% of input + 1 count)	0.25 volt
2 mA	±1.999		
20 mA	±19.99		
200 mA	±199.9	±(0.75% of input + 1 count)	
2000 mA	±1999		1 volt

Maximum input ..... 1.999 amperes on 2000 mA range

Response time ..... 1 second to within rated accuracy

Overload protection ..... 2-ampere, 250 volt fuse and 3-ampere, 600 volt fuse in series

AC Current (True RMS, AC Coupled)

Range	Maximum display	Accuracy		Burden voltage (maximum)
		20 to 40 Hz	40 Hz to 1 kHz	
200 uA	199.9	±(2.0% of input + 5 counts) all ranges	±(1.5% of input + 5 counts) all ranges	0.25 volt
2 mA	1.999			
20 mA	19.99			
200 mA	199.9			
2000 mA	1999			1 volt

Maximum input ..... 1.999 amperes on 2000 mA range

Response time ..... 3 seconds to within rated accuracy

1-11. EQUIPMENT DATA (Continued)

MULTIMETER TECHNICAL DATA (Continued)

Overload protection ..... 2-ampere, 250 volt fuse and 3-ampere, 600 volt fuse in series

Crest factor ..... 3:1 at full scale

Resistance

Range	Maximum display	Accuracy	Typical open-circuit voltage
200 ohms	199.9	±(0.25% of input + 1 count)	2.4 V
2 k	1.999		2.4 V
20 k	19.99		0.45 V
200 k	199.9		0.45 V
2000 k	1999		0.45 V
20 M	19.99	±(1.0% of input + 1 count)	2.4 V

Short-circuit test current ..... 2 mA maximum

Response time ..... 1 second to within rated accuracy; except 7 seconds on 20M range

Overload protection ..... 750 VDC + peak AC on all ranges

Forward diode test ..... Diode symbol indicated on 2k ohms range. Measures forward resistance of semiconductor junction at about 0.5 mA

Reverse diode test ..... Selecting 20M ohms range measures reverse leakage resistance

1-11. EQUIPMENT DATA (Continued)

Continuity (200 ohms and 2k ranges)

Display ..... "▲" (up arrow) open circuit; "▼" (down arrow) continuity, with switch activated tone

Response time ..... 50 microseconds (minimum duration of continuity or open to turn on display or tone). Display and tone held for approximately 100 milliseconds

Overload protection ..... 750 VDC or peak AC on all ranges

Absolute Value Pulse Detector (200k range)

Reference level ..... ±0.4 volts (approximate)

Display ..... "▲" (up arrow) for absolute values greater than reference; "▼" (down arrow) for absolute values less than reference (with switch activated tone); "◆" for inputs passing above and below reference

Pulse response ..... 50 microseconds (minimum width of a 0 to ±1 volt pulse required to turn on "▲" display). Display held approximately 100 milliseconds when narrow pulses are detected

Input impedance ..... 100 kilohms shunted by less than 100 pF

Overload protection ..... 750 VDC or peak AC

1-11. EQUIPMENT DATA (Continued)

Differential Peak Hold

Function	Accuracy	Acquisition time (minimum duration)
DC voltage	±(1.0% of input + 10 counts)	10 milliseconds for square pulses
DC current	±(1.5% of input + 10 counts)	
AC voltage and current (100 Hz to 1 kHz)	±(3% of input + 10 counts)	200 milliseconds

Peak hold selection ..... Slide switch for + or - peaks

Display decay rate ..... 1 count/second

Numerical Display

Type ..... 3-1/2 digit (1999 maximum count), 0.4 inch, 7 segment LCD (liquid crystal display)

Polarity indication ..... automatic "-", implied "+" on DC ranges

Decimal point location ..... automatic with range switch selection

Overrange indication ..... all digits except most significant "1" blanked

Conversion (display) rate ..... 3 per second, nominal

1-11. EQUIPMENT DATA (Continued)

Bargraph Display

Type ..... 20 segment LCD bargraph with 2 segment over-range (22 segments total). Left hand zero

Polarity sensing ..... absolute value type, reading upscale for DC or AC

Sensitivity ..... 10 mV on 200 mV range

Accuracy ..... ±(5% of input + 1 segment)

Maximum display
750 VAC, 1000 VDC, and 2000 mA ranges ..... limited to maximum input
All other voltage/current ranges ..... 110 percent of range

Response time ..... 150 milliseconds to within rated accuracy

Conversion (display) rate ..... 60 per second, nominal

Voltage Protection

Rated circuit-to-ground voltage (maximum common mode voltage) ..... 1000 V (DC + peak AC) from any input terminal to powerline (earth) ground

Transient protection ..... 6 kV at 100 microseconds on all voltage and resistance ranges

Power Requirements (applies to DC ranges only)

Battery type ..... 9-volt alkaline, NEDA 1604A

Alkaline battery life ..... 200 hours, nominal

Low battery indicator ..... first appearance of "B" symbol in upper left corner of LCD signifies 20 hours (nominal) remaining battery life

1-11. EQUIPMENT DATA (Continued)

HIGH VOLTAGE PROBE TECHNICAL DATA

Range (maximum)	
DC	5,000 volts
RMS sinewave	5,000 volts
Peak AC	7,070 volts
Peak composite (AC + DC)	5,000 volts
Input Resistance (includes 10 megohms in multimeter)	100 megohms
Accuracy (at 73 degrees F)	
Probe	±5%
Measurement	±5% + multimeter accuracy

CURRENT SHUNT TECHNICAL DATA

Range (AC or DC maximum)	0 to 10 amperes
Frequency limit	DC to 5 kHz
Accuracy	
Shunt	±0.25% of input current
Measurement	±0.25% + multimeter accuracy
Burden (maximum at 10 amperes)	voltage drop of test leads + 125 mV
Output voltage	10 mV per ampere
Overload (not fused)	20 amperes for 30 seconds maximum
Rated circuit-to-ground voltage (AC or DC)	250 volts maximum

Section III. PRINCIPLES OF OPERATION

1-12. MULTIMETER THEORY

a. Power Supply.

- One 9-volt battery supplies all power.
- Pushing POWER switch to ON applies power.
- Voltage monitor circuit samples battery voltage; causes display "B" symbol to appear when remaining battery life is about 20 hours.

1-12. MULTIMETER THEORY (Continued)

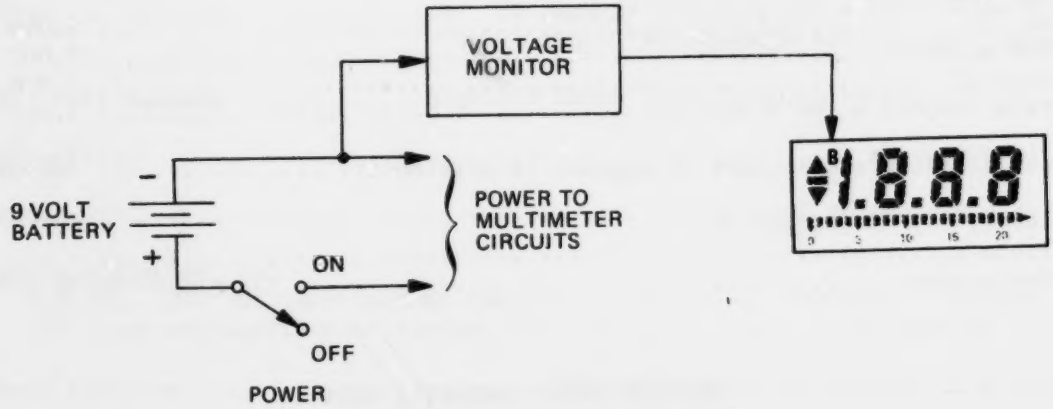

b. Function, Range, and Display Circuits.

- Front panel V, mA, or OHMS switch selects input terminal and corresponding function circuitry.

- Two fuses in series with mA terminal protect multimeter from high current.

- Front panel range switches select maximum display value for measurement. Range switches also display required decimal point.

- Conversion/display circuitry converts analog value to digital value, causing appropriate digits and bargraph segments to appear on LCD.

- Minus (-) symbol appears automatically on DC functions for negative values.

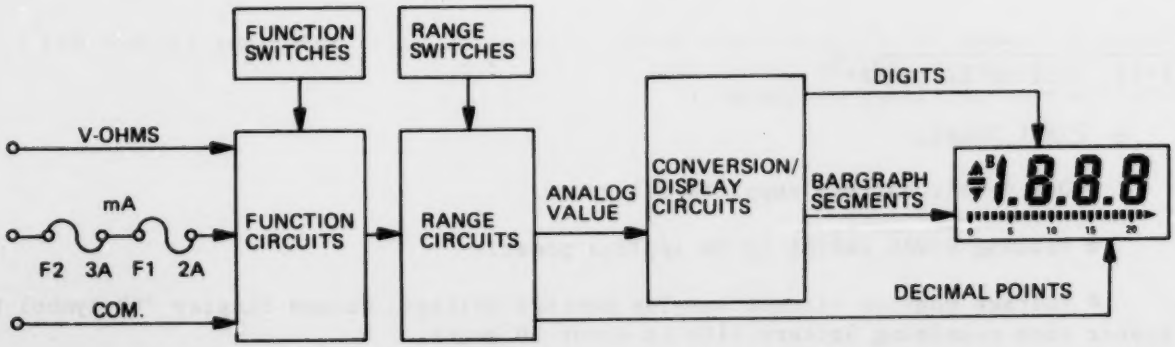

1-12. MULTIMETER THEORY (Continued)

c. Pulse and Continuity Circuit.

- Pushing OHMS and 200k switches selects pulse detector mode, pushing OHMS and 2k switches selects continuity mode.

- Level detector causes "▲" (up arrow) to display if signal is positive going (open circuit), causes "▼" (down arrow) to display if signal is negative going (continuity) when positive logic signals are input.

- Closing AC switch enables solid state buzzer, which sounds whenever "▼" (down arrow) is displayed.

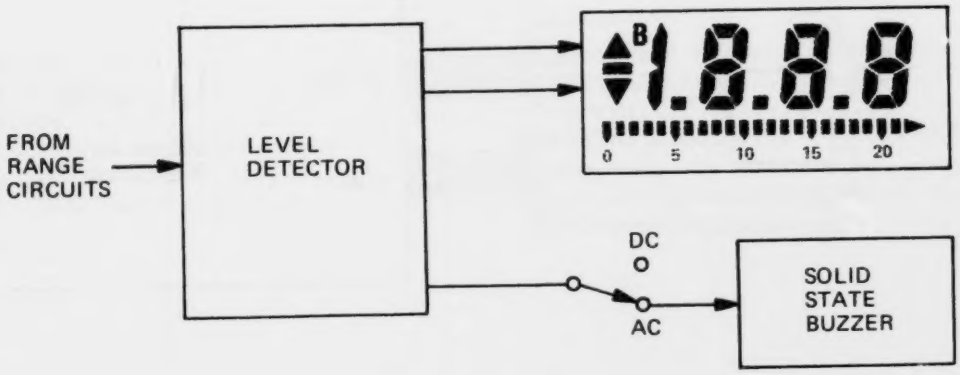

1-13. HIGH VOLTAGE PROBE THEORY

- Precision 90 megohms resistor supplies 1/10th of input voltage to multimeter input terminals.

- Decreases circuit loading (increases input impedance to 100 megohms).

- Screws onto threaded end of red test lead.

- Multimeter set to 1000 V DC or 750 V AC; display multiplied by 10 to determine voltage value.

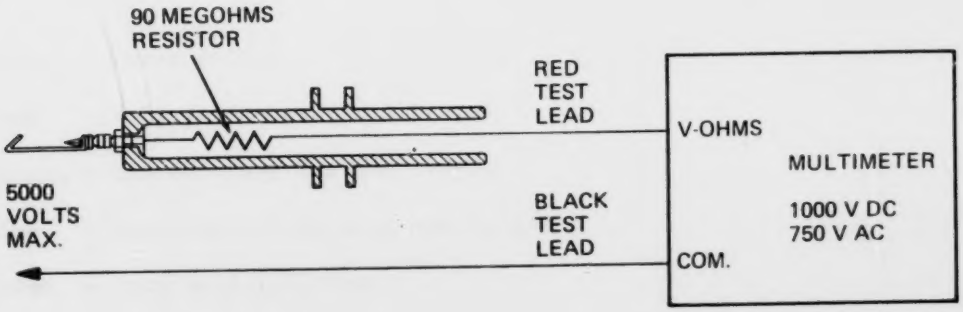

1-14. CURRENT SHUNT THEORY

- Calibrated taps at shunt provide 10 mV at TO DMM terminals for every 1 ampere of current flowing through INPUT terminals.

- Plugs directly into multimeter V-OHMS and COM terminals.

- Multimeter set to 200 mV AC or DC; display divided by ten to determine current value.

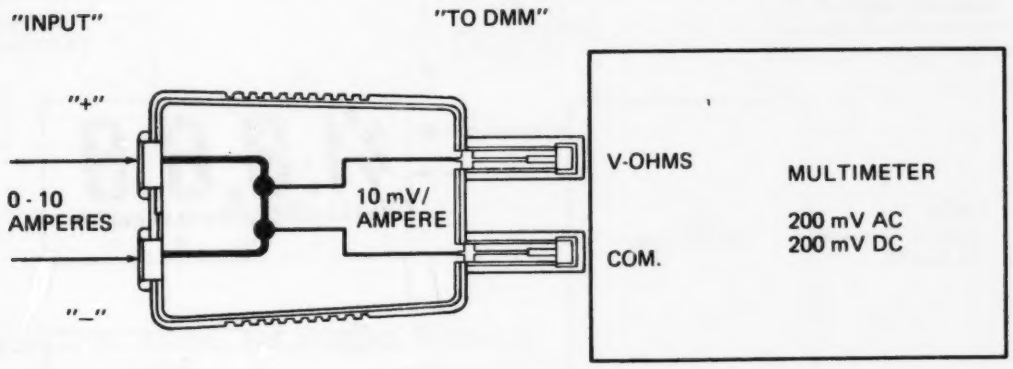

CHAPTER 2
OPERATING INSTRUCTIONS

CHAPTER OVERVIEW

The purpose of this chapter is to familiarize you with the equipment so that you can operate it safely, efficiently, and effectively.

	Paragraph
Introduction	2-1
Operator's Controls and Indicators	2-2
General (Preventive Maintenance Checks and Services)	2-3
Operator PMCS Table	2-4
Assembly and Preparation for Use	2-5
Initial Adjustments, Checks, and Test	2-6
Operating Procedures	2-7
Preparation for Movement	2-8
Operating Instructions Decal	2-9

Section I. DESCRIPTION AND USE OF OPERATOR'S CONTROLS AND INDICATORS

2-1. INTRODUCTION

a. Purpose. Improper operation or control settings could damage the equipment or cause injury. You must therefore become familiar with the equipment controls and indicators before attempting operation.

b. General. All operator's controls and indicators are located on the multimeter. Controls consist of 12 pushbutton switches and one slide switch on the front panel. The panel is color coded to assist in selecting the proper switches as follows:

- White - Power switch
- Pink - Voltage function and ranges
- Yellow - Current function and ranges
- Blue - Resistance functions and ranges
- Green - Peak hold function

2-2. OPERATOR'S CONTROLS AND INDICATORS

a. General. All operator's controls, connectors, and indicators are described in the following illustrations and paragraphs.

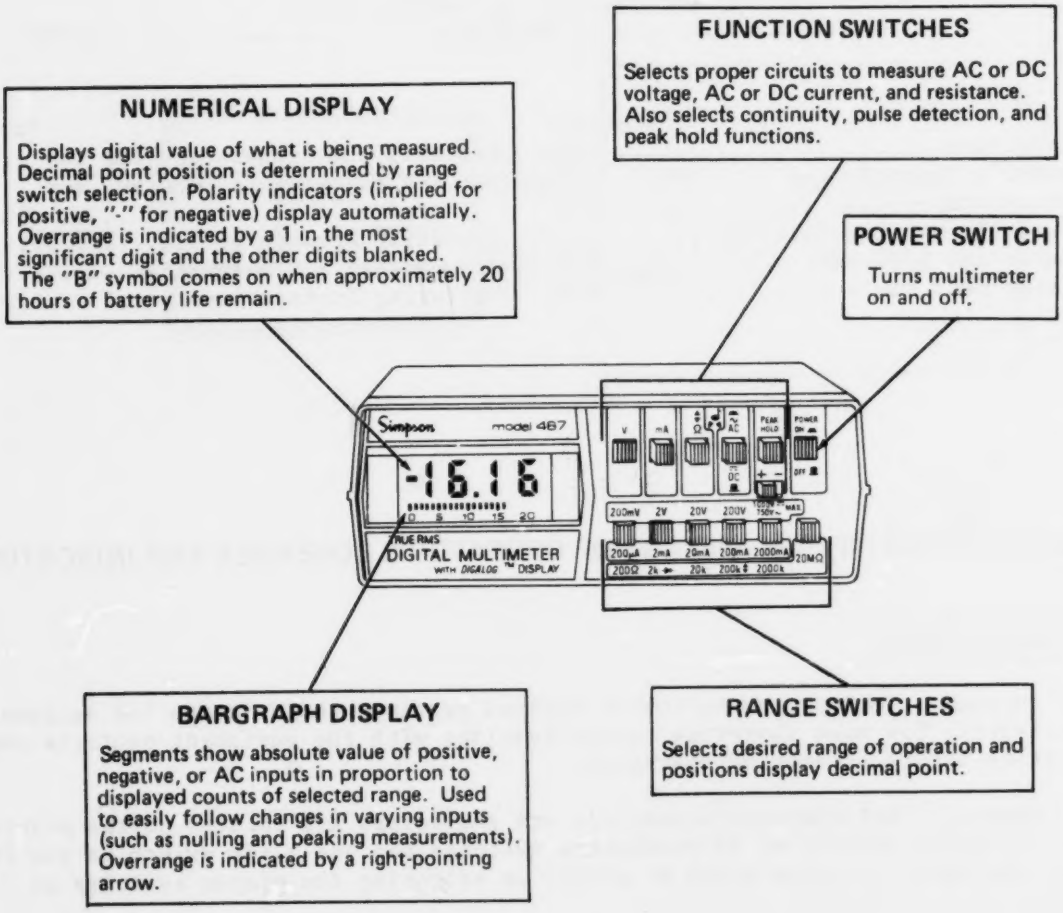

2-2. OPERATOR'S CONTROLS AND INDICATORS (Continued)

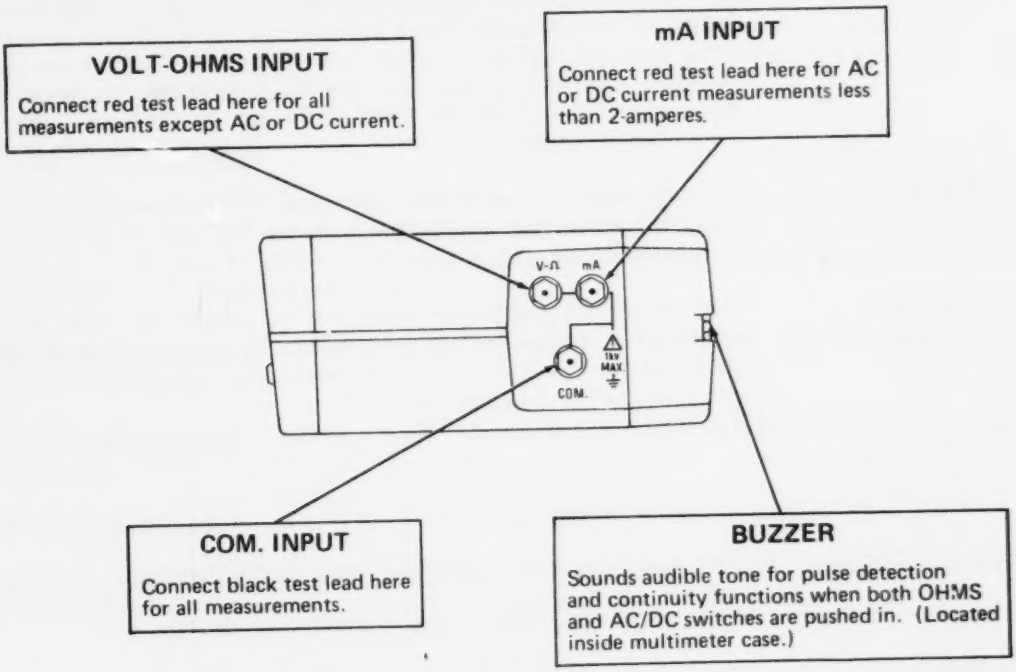

b. Function Switches. Connect multimeter input to appropriate measuring circuits as follows:

V	Selects DC voltage or AC voltage measuring circuit, depending on position of AC/DC switch.
mA	Selects DC current or AC current measuring circuit, depending on position of AC/DC switch.
OHMS	Selects resistance measurement function with selection of any one of the six resistance range switches; or selects pulse detection mode with selection of 200k range switch; or selects diode test mode with selection of 2k range switch; or selects continuity test mode with selection of 2k range switch. Continuity occurs with resistance of 500 ohms or less in the 2k range.

2-2. OPERATOR'S CONTROLS AND INDICATORS (Continued)

AC/DC	AC ("in") position selects AC voltage or AC current measuring circuit, depending on selection of either V or mA function switch; or selects audible buzzer for pulse detection or continuity mode with selection of OHMS function switch and appropriate resistance range switches.
SLIDE SWITCH	Selects capture polarity for peak hold function. "+" position captures positive peaks, "-" position captures negative peaks.
PEAK HOLD	"In" position captures positive or negative peak on any range of voltage or current being measured, and holds value on numerical display. "Out" position used for normal (nonpeak hold) operation.

c. Range Switches. Select maximum measurement range as follows:

Voltage	200mV, 2V, 20V, 200V, and 1000VDC or 750VAC
Current	200uA, 2mA, 20mA, 200ma, and 2000mA
Resistance	200-ohms, 2k, 20k, 200k, 2000k, and 20M
Continuity	200-ohms and 2k ranges
Diode Test	2k range (diode symbol)
Pulse Detection	200k range (up and down arrow symbols)

d. Display. The display includes the following features in addition to those described on the preceding illustration:

Pulse Detection	Displays up arrow for absolute values greater than approximately ±0.4 volt; displays down arrow for absolute values less than ±0.4 volt.
Continuity	Displays up arrow for open circuit; displays down arrow for indication of continuity.

Section II. OPERATOR PREVENTIVE MAINTENANCE CHECKS AND SERVICES

2-3. GENERAL

To be sure that your equipment is always ready for your mission, you must do scheduled preventive maintenance checks and services (PMCS). The scheduled inspections allow defects to be discovered and corrected before they result in serious damage or failure.

2-4. OPERATOR PMCS TABLE

A PMCS table for AN/PSM-45 is provided below. There are five catagories or intervals of PMCS: B, D, A, W, and M. They head the Interval column of the PMCS table. A dot in one or more of the Interval columns indicates the check and/or service that you should perform at a particular time.

a. Before you operate. Always keep in mind the CAUTIONS and WARNINGS. Perform your before (B) PMCS.

b. While you operate. Always keep in mind the CAUTIONS and WARNINGS. Perform your during (D) PMCS.

c. After you operate. Be sure to perform your after (A) PMCS.

d. If your equipment fails to operate. Troubleshoot with proper equipment. Report any deficiencies using the proper forms (see TM 38-750).

NOTE

Use your PMCS table Item no. column to get the number for the TM ITEM NO. column of DA Form 2404 (Equipment Inspection and Maintenance Worksheet) when recording results of PMCS.

2-4. OPERATOR PMCS TABLE (Continued)

EQUIPMENT INSPECTION AND MAINTENANCE WORKSHEET

For use of this form, see TM 38-750; the proponent agency is the Office of the Deputy Chief of Staff for Logistics.

1. ORGANIZATION	2. NOMENCLATURE AND MODEL

3. REGISTRATION/SERIAL/FSN	4a. MILES	4b. HOURS	4c. ROUNDS FIRED	4d. HOT STARTS	5. DATE	6. TYPE INSPECTION

APPLICABLE REFERENCE

7. TM NUMBER	TM DATE	TM NUMBER	TM DATE

INSTRUCTIONS - Perform each check listed in the TM applicable to the inspection performed. Following the sequence listed in pertinent TM, complete form as follows:

COLUMN a - Enter TM item number.

COLUMN b - Enter the applicable condition status symbol.

COLUMN c - Enter deficiencies and shortcomings.

COLUMN d - Show corrective action for deficiency or shortcoming listed in Column c.

COLUMN e - Individual ascertaining completed corrective action initial in this column.

ALL INSPECTIONS AND EQUIPMENT CONDITIONS RECORDED ON THIS FORM HAVE BEEN DETERMINED IN ACCORDANCE WITH DIAGNOSTIC PROCEDURES AND STANDARDS IN THE TM CITED HEREON.

8a. SIGNATURE (Person(s) performing inspection)	8b. TIME	9a. SIGNATURE (Maintenance Supervisor)	9b. TIME	10. MANHOURS REQUIRED

TM ITEM NO. a	STATUS b	DEFICIENCIES AND SHORTCOMINGS c	CORRECTIVE ACTION d	INITIAL WHEN CORRECTED e

USE PMCS ITEM NO

42100-017

DA Form 2404

2-4. OPERATOR PMCS TABLE (Continued)

Table 2-1. OPERATOR PREVENTIVE MAINTENANCE CHECKS AND SERVICES

NOTE

These checks are to be made in the order listed, within the designated interval.

B - Before A - After M - Monthly
D - During W - Weekly

Item no.	Interval B	D	A	W	M	Item to be inspected	Procedure	For readiness reporting equipment is not ready/available if:
1	●		●		●	COEIL	Inventory for completeness (see appendix C).	Any component missing.
2				●		Exterior surfaces	Clean (see para 3-4).	
3		●		●		Connectors	Inspect for dents, cracks, corrosion, or improper mating.	Connectors damaged, corroded, or do not mate properly.
4	●	●	●	●		Multimeter display	Inspect for cracks or severe scratches.	Display not readable.
5	●	●	●	●		Multimeter switches	Check switches for smooth mechanical action.	Switches bind or do not operate.
6	●	●	●	●		Test leads	Inspect for cuts, cracked or gouged insulation, fraying, and kinks.	Leads cut, or insulation cracked or frayed.
7					●	AN/PSM-45 operation	Perform operational checkout procedure (see para 3-3).	Equipment fails any step.

Section III. OPERATION UNDER USUAL CONDITIONS

2-5. ASSEMBLY AND PREPARATION FOR USE

Procedures for unpacking, checking, and assembling AN/PSM-45 are given in paragraph 4-4 (notify organizational maintenance personnel).

2-6. INITIAL ADJUSTMENTS, CHECKS, AND TEST

There are no operator adjustments for AN/PSM-45. Immediately upon receipt, perform your complete PMCS as listed in paragraph 2-4 above, including the operational checkout procedure (para 3-3).

2-7. OPERATING PROCEDURES

a. DC Voltage Measurements.

(1) Connect red test lead plug to multimeter V-OHMS jack.

(2) Connect black test lead plug to multimeter COM jack.

(3) Set multimeter switches as follows:

POWER - in (ON)
V function - in
AC/DC - out (DC)
PEAK HOLD - out

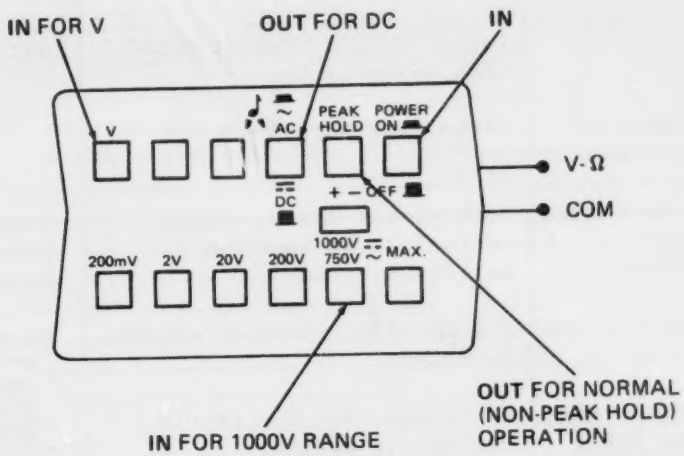

WARNING

Do not attempt to measure voltages on the 1000V range which might be greater than 1000 VDC. Refer to para 2-7c for high voltage probe measurements.

(4) Depress appropriate voltage range switch. If voltage being measured is unknown, begin with the 1000V range switch.

WARNING

Remove all power from circuit being measured and discharge all capacitors before connecting or disconnecting test leads.

(5) Connect test leads to circuit being measured.

(6) Apply power to circuit being measured.

(7) Observe multimeter display. Display will automatically indicate correct polarity, "-" for negative and no sign for positive. The value of voltage being measured will be shown on both the numerical and bargraph displays.

2-7. OPERATING PROCEDURES (Continued)

WARNING

Remove all power from circuit being measured and discharge all capacitors before connecting or disconnecting test leads.

(8) Disconnect test leads from circuit being measured after measurement is complete.

(9) Set multimeter POWER switch to the OFF (out) position.

b. AC Voltage Measurements.

(1) Connect red test lead plug to multimeter V-OHMS jack.

(2) Connect black test lead plug to multimeter COM jack.

(3) Set multimeter switches as follows:

POWER - in (ON)
V function - in
AC/DC - in (AC)
PEAK HOLD - out

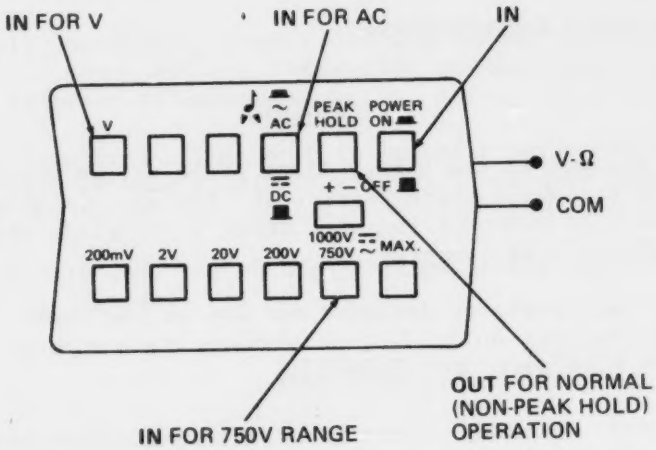

WARNING

Do not attempt to measure voltages on the 750V range which might be greater than 750 VAC. Refer to para 2-7c for high voltage probe measurements.

(4) Depress appropriate voltage range switch. If voltage being measured is unknown, begin with the 750V range switch.

2-7. OPERATING PROCEDURES (Continued)

WARNING

Remove all power from circuit being measured and discharge all capacitors before connecting or disconnecting test leads.

(5) Connect test leads to circuit being measured.

(6) Apply power to circuit being measured.

(7) Observe multimeter display. The value of voltage being measured will be shown on both the numerical and bargraph displays.

WARNING

Remove all power from circuit being measured and discharge all capacitors before connecting or disconnecting test leads.

(8) Disconnect test leads from circuit being measured after measurement is complete.

(9) Set multimeter POWER switch to the OFF (out) position.

c. High Voltage Probe Measurements.

WARNING

Do not attempt to use high voltage probe unless you are qualified to recognize shock hazards and trained in precautions necessary to prevent injury. Never work alone when making high voltage measurements.

High voltage probe is designed for use in low power, high impedance circuits only. Do not attempt to use high voltage probe in high power circuits.

(1) Wipe probe body with a dry, clean cloth to remove all dirt, dust, and moisture.

(2) Screw black insulated alligator clip onto tip of black test lead probe.

(3) Screw high voltage probe onto tip of red test lead probe.

(4) Connect red test lead plug to multimeter V-OHMS jack.

(5) Connect black test lead plug to multimeter COM jack.

2-7. OPERATING PROCEDURES (Continued)

(6) Set multimeter switches as follows:

POWER - in (ON)
V function - in
AC/DC - out for DC/in for AC
PEAK HOLD - out
Range - 1000VDC/750VAC

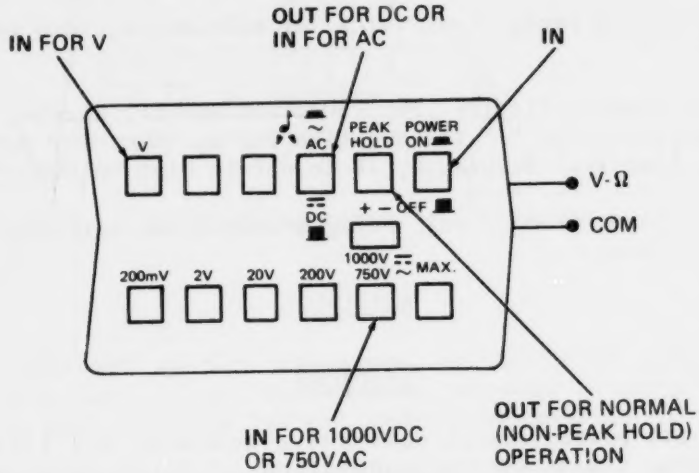

WARNING

Remove all power from circuit being measured and discharge all capacitors before connecting or disconnecting high voltage probe or alligator clip.

(7) Clip black insulated alligator clip securely to ground or chassis side of circuit to be measured. Be sure alligator clip will not come loose during measurement.

(8) Push spring clip onto tip of high voltage probe, and hook securely onto high potential side of circuit.

WARNING

Do not exceed voltage rating of probe. Maximum voltage shall be 5000 VDC, 5000 VAC (rms), or 5000 volts composite (DC plus peak AC, at or below 60 Hz).

Position high voltage probe, test leads, and multimeter to avoid bodily contact during measurement. If spring clip can not be used to secure probe, hold high voltage probe carefully behind disc barriers while touching probe tip to circuit. Remember that only the high voltage probe is insulated for the high voltage, not the test leads or multimeter.

2-7. OPERATING PROCEDURES (Continued)

CAUTION

Do not operate any multimeter pushbuttons during measurement to prevent damage to multimeter.

(9) Without touching probe, test leads, or multimeter, turn on power to circuit being measured.

(10) Observe multimeter display. For VDC measurements, display will automatically indicate correct polarity, "-" for negative and no sign for positive. Multiply voltage reading on numerical display by 10 to obtain high voltage value.

(11) Remove all power from circuit being measured and wait until display drops to zero before proceeding.

WARNING

Remove all power from circuit being measured and discharge all capacitors before connecting or disconnecting high voltage probe or alligator clip.

(12) Disconnect high voltage probe (first) and alligator clip (second) from circuit.

(13) Remove high voltage probe and alligator clip from tips of test leads.

(14) Set multimeter POWER switch to the OFF (out) position.

d. DC Current Measurements.

(1) Connect red test lead plug to multimeter mA jack.

(2) Connect black test lead plug to multimeter COM jack.

(3) Set multimeter switches as follows:

POWER	- in (ON)
mA function	- in
AC/DC	- out (DC)
PEAK HOLD	- out

2-7. OPERATING PROCEDURES (Continued)

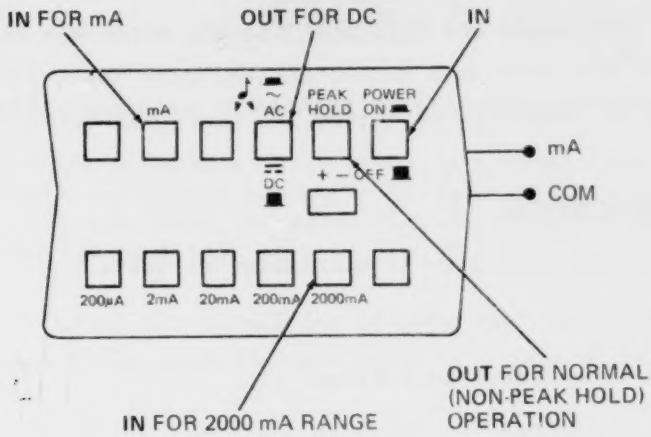

CAUTION

Do not attempt to measure current on the 2000mA range which might be greater than 2-amperes to prevent blowing fuses. Refer to para 2-7f for current shunt measurements.

(4) Depress appropriate current range switch. If current being measured is unknown, begin with the 2000mA range switch.

WARNING

Remove all power from circuit being measured and discharge all capacitors before connecting or disconnecting test leads.

Never connect a current range across a voltage source, or in series with a circuit having a voltage, with respect to ground, greater than the rated circuit-to-ground voltage of 1000 volts (DC plus peak AC).

(5) Open the circuit in which current is to be measured and securely connect test leads in series.

(6) Apply power to circuit being measured.

(7) Observe multimeter display. Display will automatically indicate correct polarity, "-" for negative and no sign for positive. The value of current being measured will be shown on both the numerical and bargraph displays.

WARNING

Remove all power from circuit being measured and discharge all capacitors before connecting or disconnecting test leads.

2-7. OPERATING PROCEDURES (Continued)

(8) Disconnect test leads and reconnect circuit which was opened after measurement is complete.

(9) Set multimeter POWER switch to the OFF (out) position.

e. AC Current Measurements.

(1) Connect red test lead plug to multimeter mA jack.

(2) Connect black test lead plug to multimeter COM jack.

(3) Set multimeter switches as follows:

POWER - in (ON)
mA function - in
AC/DC - in (AC)
PEAK HOLD - out

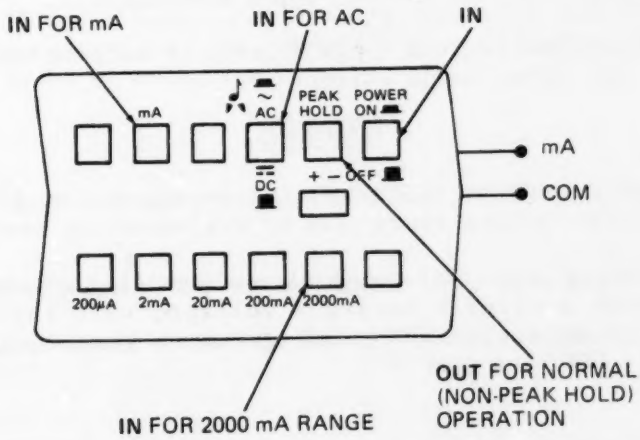

CAUTION

Do not attempt to measure current on the 2000mA range which might be greater than 2-amperes to prevent blowing fuses. Refer to para 2-7f for current shunt measurements.

(4) Press appropriate current range switch. If current being measured is unknown, begin with the 2000mA range switch.

2-7. OPERATING PROCEDURES (Continued)

WARNING

Remove all power from circuit being measured and discharge all capacitors before connecting or disconnecting test leads.

Never connect a current range across a voltage source, or in series with a circuit having a voltage, with respect to ground, greater than the rated circuit-to-ground voltage of 1000 volts (DC plus peak AC).

(5) Open the circuit in which current is to be measured and securely connect test leads in series.

(6) Apply power to circuit being measured.

(7) Observe multimeter display. The value of current being measured will be shown on both the numerical and bargraph displays.

WARNING

Remove all power from circuit being measured and discharge all capacitors before connecting or disconnecting test leads.

(8) Disconnect test leads and reconnect circuit which was opened after measurement is complete.

(9) Set multimeter POWER switch to the OFF (out) position.

f. Current Shunt Measurements.

(1) Plug current shunt "To DMM" plugs into multimeter input jacks as marked on shunt (V plug to V-OHMS jack and COM plug to COM jack).

(2) Connect red test lead plug to current shunt "+" jack.

(3) Connect black test lead plug to current shunt "-" jack.

(4) Set multimeter switches as follows:

POWER	- in (ON)
V function	- in
AC/DC	- in for AC, out for DC
Range	- 200mV
PEAK HOLD	- out

2-7. OPERATING PROCEDURES (Continued)

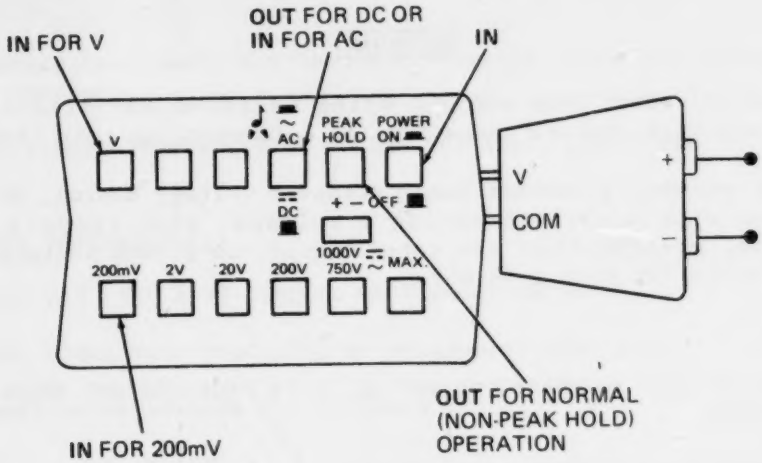

WARNING

Remove all power from circuit being measured and discharge all capacitors before connecting or disconnecting test leads.

Never connect current shunt across a voltage source, or in series with a circuit having a voltage, with respect to ground, greater than the rated circuit-to-ground voltage of 250 volts AC or DC.

CAUTION

Do not attempt to measure current which might be greater than the 10-ampere rating of current shunt to prevent damage due to overheating.

(5) Open the circuit in which current is to be measured and securely connect test leads in series.

(6) Apply power to circuit being measured.

(7) Observe multimeter display. The value of current being measured will be shown on the display at the rate of 10 mV per ampere. Divide multimeter display by 10 for the current value in amperes.

(8) Remove all power from circuit being measured and wait until display drops to zero before proceeding.

WARNING

Remove all power from circuit being measured and discharge all capacitors before connecting or disconnecting test leads.

2-7. OPERATING PROCEDURES (Continued)

(9) Disconnect test leads and reconnect circuit which was opened after measurement is complete.

(10) Unplug current shunt from multimeter jacks.

(11) Set multimeter POWER switch to the OFF (out) position.

g. Resistance Measurements.

(1) Connect red test lead plug to multimeter V-OHMS jack.

(2) Connect black test lead plug to multimeter COM jack.

(3) Set multimeter switches as follows:

POWER	- in (ON)
OHMS function	- in
AC/DC	- out for normal (nonbuzzer)
PEAK HOLD	- out

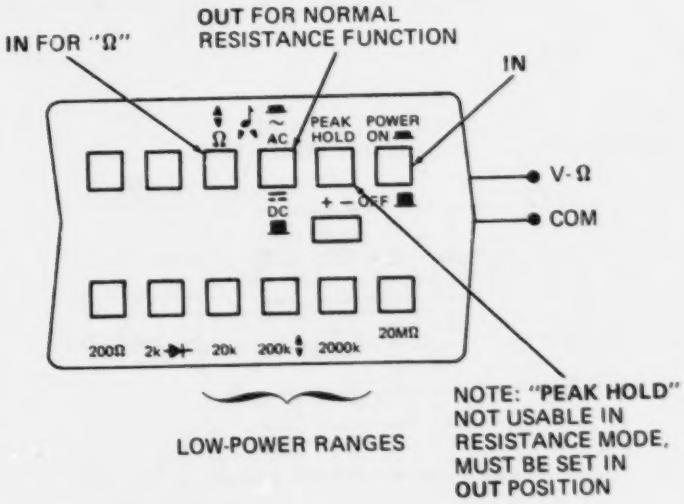

(4) Depress appropriate resistance range switch:

(a) Low power (0.45V open-circuit voltage) on 20k, 200k, and 2000k ranges.

(b) Standard power (2.4V open-circuit voltage) on 200, 2k, and 20M ranges.

WARNING

Remove all power from circuit being measured and discharge all capacitors before connecting test leads.

2-7. OPERATING PROCEDURES (Continued)

(5) Connect test leads to resistance being measured.

(6) Allow time for multimeter display to stabilize; then read resistance value on display.

(7) Disconnect test leads from resistance being measured after measurement is complete.

(8) Set multimeter POWER switch to the OFF (out) position.

h. Continuity Measurements.

(1) Connect red test lead plug to multimeter V-OHMS jack.

(2) Connect black test lead plug to multimeter COM jack.

(3) Set multimeter switches as follows:

POWER	- in (ON)
OHMS function	- in
AC/DC	- in for audible tone, out for normal (nonbuzzer)
2k range	- in
PEAK HOLD	- out

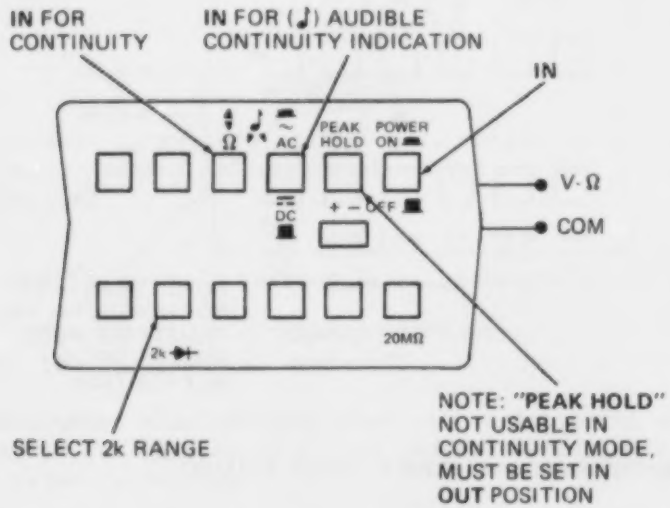

WARNING

Remove all power from circuit being measured and discharge all capacitors before connecting test leads.

(4) Connect test leads to circuit being measured.

2-7. OPERATING PROCEDURES (Continued)

(5) Observe multimeter display. Continuity is indicated by a downward pointing arrow. Continuity is also indicated by an audible tone if AC/DC switch is pushed in.

NOTE

Multimeter responds to continuity of 50 microseconds or longer duration.

(6) Disconnect test leads from circuit being measured after measurement is complete.

(8) Set multimeter POWER switch to the OFF (out) position.

i. Diode Test.

(1) Connect red test lead plug to multimeter V-OHMS jack.

(2) Connect black test lead plug to multimeter COM jack.

(3) Set multimeter switches as follows:

POWER - in (ON)
OHMS function - in
2k range - in
PEAK HOLD - out

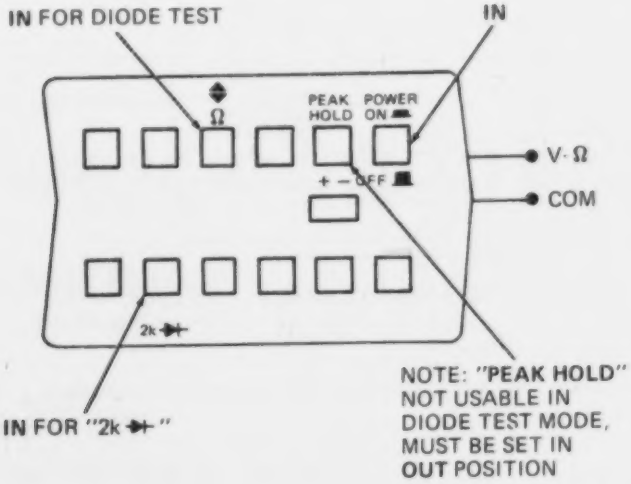

NOTE

Diode to be tested must be out of circuit.

(4) Connect red test lead probe to anode of diode being tested; connect black test probe to cathode.

2-7. OPERATING PROCEDURES (Continued)

(5) Observe multimeter display for forward resistance with 0.5 mA current. A display of 0.559 to 0.950 is typical for silcon diodes.

(6) Reverse test leads. Display should now show overrange.

(7) Disconnect test leads from diode after test is complete.

(8) Set multimeter POWER switch to the OFF (out) position.

i. Peak Hold.

NOTE

Using peak hold function while OHMS function switch is in will result in erroneous displays.

(1) Follow procedure for voltage or current measurement function desired (para 2-7a thru 2-7e).

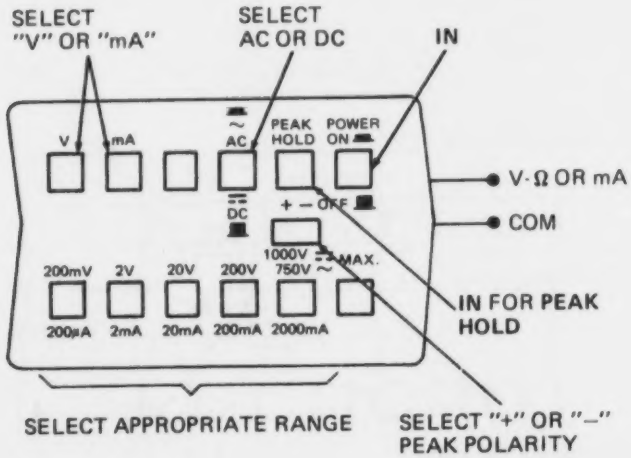

2-7. OPERATING PROCEDURES (Continued)

(2) To capture and display peak value, operate PEAK HOLD and slide switches as charted below for the appropriate input condition:

	Condition A	Condition B	Condition C
	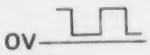	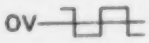	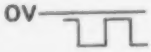
To hold most **positive** value	1. Set slide switch to "+" 2. Push PEAK HOLD switch in	1. Set slide switch to "+" 2. Push PEAK HOLD switch in	1. Perform procedure below for most **negative** value 2. Set slide switch to "+" position
To hold most **negative** value	1. Perform procedure above for most **positive** value 2. Set slide switch to "-" position	1. Set slide switch to "-" 2. Push PEAK HOLD switch in	1. Set slide switch to "-" 2. Push PEAK HOLD switch in

(3) Peak value is displayed on multimeter numerical display. Note that bargraph display still responds to changes in input.

(4) To capture and display a new peak value, first release PEAK HOLD switch to the out position to clear previous reading, then repeat steps (1) and (2) above.

k. Absolute Value Pulse Detector.

NOTE

Reading of numerical display is meaningless in absolute value pulse detector mode.

(1) Set multimeter switches as follows:

POWER - in (ON)
OHMS function - in
AC/DC function - in for audible tone
200k range - in
PEAK HOLD - out

2-7. OPERATING PROCEDURES (Continued)

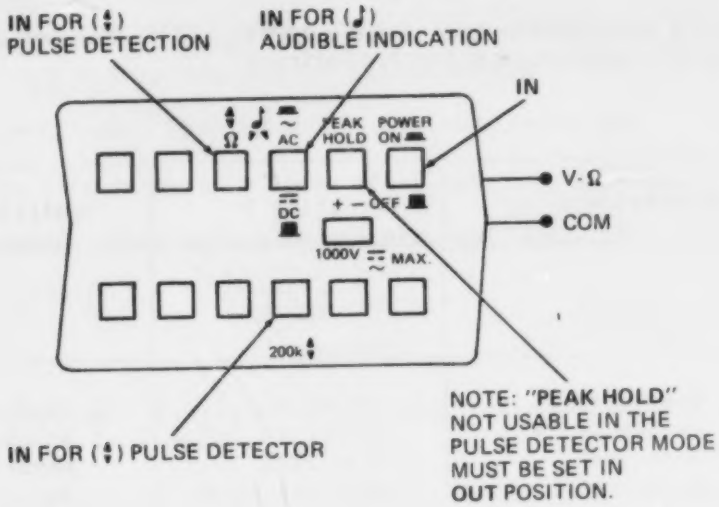

(2) Follow procedure for resistance measurement function (para 2-7g).

NOTE

To be detected, pulse must have a minimum width of 50 microseconds and must exceed a reference level of approximately ±0.4 VDC.

(3) Display and buzzer indications for various input signals are shown below:

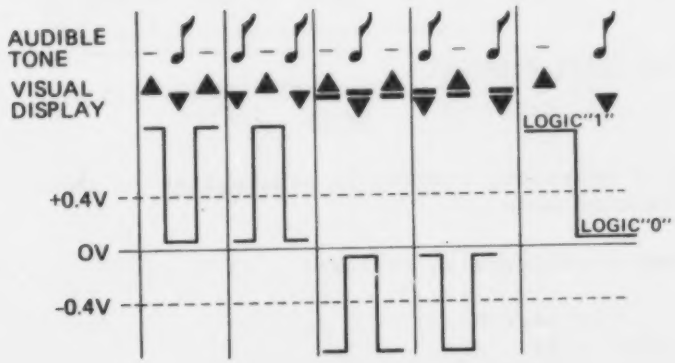

2-8. PREPARATION FOR MOVEMENT

Prepare AN/PSM-45 for routine movement as follows:

a. Place multimeter POWER switch in OFF (out) position.

b. Disconnect high voltage probe, current shunt, alligator clips, and test leads as necessary.

c. Position components in foam base of carrying case as shown. (Store publications behind document flap of lid.)

d. Close and latch carrying case lid.

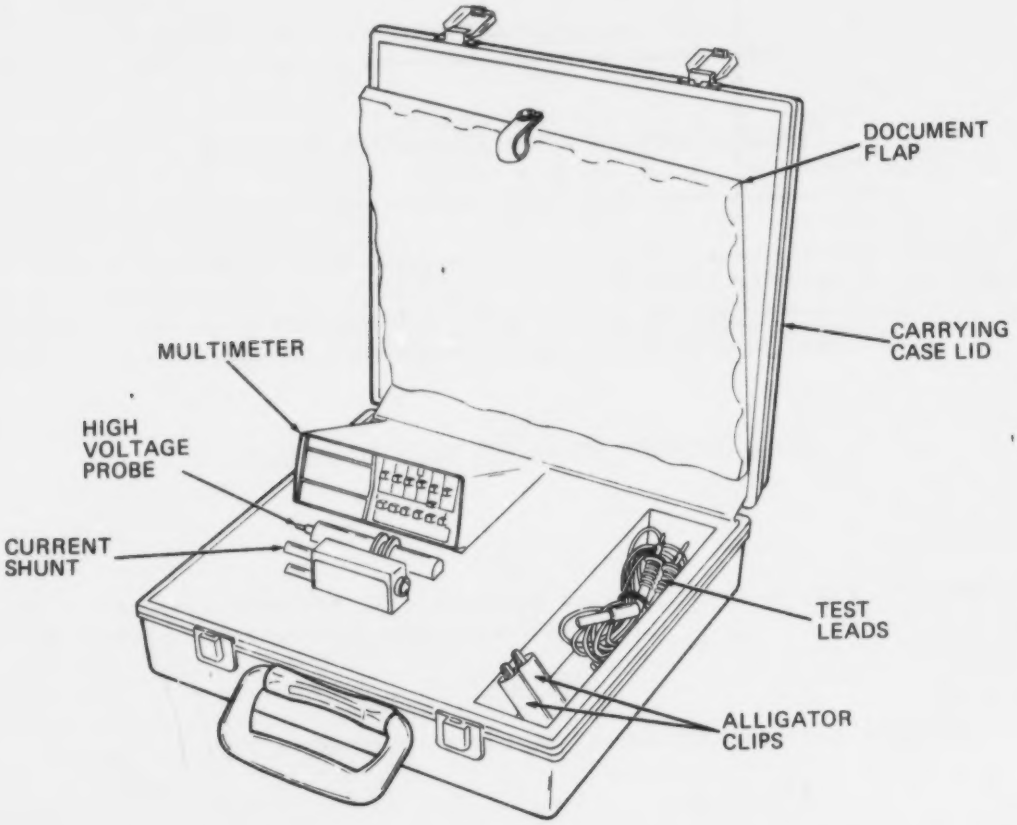

2-9. OPERATING INSTRUCTIONS DECAL

Condensed multimeter operating instructions are provided on a decal located at the bottom of the multimeter. Use the following reproduction of these instructions if the decal is illegible.

CONDENSED OPERATING INSTRUCTIONS 6-112380

WARNING: Voltages encountered within the capability of this instrument are dangerous and can be fatal. Read and follow the operating instructions and warnings contained in the Operator's Manual.

- For normal operation "PEAK HOLD" switch should be in the "out" position.
- The bargraph reading corresponds to the absolute value in both AC/DC volts and AC/DC mA functions.

TO MEASURE	FUNCTION	RANGE	INPUT	ACCURACY*	MAX INPUT**
DC Volts	V, $\overline{\overline{DC}}$	200mV-1000V	V-Ω & Com	±0.1% ±1 ct.	1000V
AC Volts	V, $\widetilde{AC}$	200mV-750V	V-Ω & Com	±0.5% ±5 cts.	
DC Current	mA, $\overline{\overline{DC}}$	200μA-2000mA	mA & Com	±0.5% ±1 ct.	Double Fuse Protected at 2 Amps
AC Current	mA, $\widetilde{AC}$	200μA-2000mA	mA & Com	±1.5% ±5 cts.	
Ohms	Ω	200Ω - 20MΩ	V-Ω & Com	±0.25% ±1 ct.	750V
Continuity	Ω	200Ω, 2k	V-Ω & Com	Depress AC button for audio tone	
Pulse Detection	▲▼ Ω	200k ▲▼	V-Ω & Com	50μs min pulse width	
Peak Hold	Peak Hold + or −	All V and mA ranges	V-Ω & Com	±1.0% ±10 cts. 10ms Square Pulse	1000V

*In % of input ± counts and for most ranges from +18°C to +28°C **(DC + pk AC)

Max. Common Mode Voltage: 1000V (DC + pk AC) from terminals to earth ground
Battery Type: 9V alkaline (NEDA 1604A) or carbon-zinc (NEDA 1604)
Low Battery Indicator: Display symbol B indicates 20 hours of battery life remaining

CHAPTER 3

OPERATOR MAINTENANCE

CHAPTER OVERVIEW

The purpose of this chapter is to give you checkout and cleaning procedures to help you keep your instrument in good working order.

	Paragraph		Paragraph
Operator Troubleshooting	3-1	Operational Checkout	3-3
Introduction (Maintenance)	3-2	Cleaning	3-4

Section I. LUBRICATION INSTRUCTIONS

(Not Applicable)

Section II. TROUBLESHOOTING PROCEDURES

3-1. OPERATOR TROUBLESHOOTING

No operator troubleshooting is provided. If you detect a problem during operation, perform the operational checkout (para 3-3 below). If the proper result is not obtained for any check, notify organizational maintenance personnel.

Section III. MAINTENANCE PROCEDURES

3-2. INTRODUCTION

Operator maintenance consists of inspection (as described in para 2-4, Operator PMCS), an operational checkout, and cleaning.

CAUTION

You are not authorized to remove the multimeter rear cover or case.

3-3. OPERATIONAL CHECKOUT

Check the equipment for proper operation by performing the steps in the following table. Perform each step in the order listed. If a normal indication is not obtained for any step, turn the multimeter off and notify organizational maintenance personnel.

3-3. OPERATIONAL CHECKOUT (Continued)

Step	Location	Item	Action	Normal Indication
MULTIMETER NUMERICAL DISPLAY CHECK				
1	Multimeter switches	a. POWER b. PEAK HOLD c. Slide switch d. AC/DC e. V function f. 200V range	ON Out (off) + Out (DC) In (on) In (on)	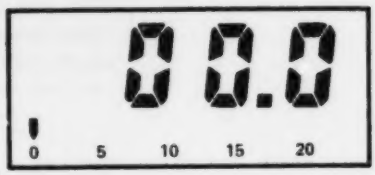 Note: "-" symbol may appear
MULTIMETER OHMS FUNCTION AND BUZZER CHECK				
2	Multimeter, side	a. Test leads b. Alligator clips	Connect to V-ohms and COM terminals Screw onto test leads; then connect together	
3	Multimeter switches	a. AC/DC b. Ohms function c. 20k range	In (AC) In (on) In (on)	 Audible tone shall be on
4	Multimeter switches	AC/DC	DC (out)	Audible tone shall be off
5	Multimeter, side	Test leads	Disconnect	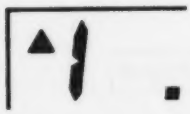 (overrange)
MULTIMETER BARGRAPH DISPLAY CHECK				
6	Multimeter switches	a. 200 ohms range b. V function	In (on) In (on)	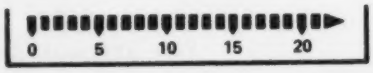 All bargraph segments shall appear; then decay to zero

3-3. OPERATIONAL CHECKOUT (Continued)

Step	Location	Item	Action	Normal Indication
CURRENT SHUNT CHECK				
7	Multimeter switches	Ohms function	In (on)	
8	Multimeter, side	Current shunt	a. Plug into V-ohms and COM terminals; don't connect test leads b. Disconnect from multimeter	▼ 00.0 NOTE: Least significant digit may be "1" instead of "0"
HIGH VOLTAGE PROBE CHECK				
9	Multimeter, side	a. Test leads b. High voltage probe c. Alligator clip	Connect to V-ohms and COM terminals Screw onto red test lead a. Screw onto black test lead b. Connect to tip of high voltage probe	
10	Multimeter switches	20M range	In (on)	▲1. (overrange)
11	Multimeter, side	a. Alligator clip b. High voltage probe c. Test leads	Disconnect and remove Remove from test lead Disconnect	
12	Multimeter switches	POWER	OFF	

3-4. CLEANING

a. Carrying Case. Remove all AN/PSM-45 components from carrying case, and remove dust and dirt by brushing or vacuuming. Clean exterior of case by wiping with a damp cloth; then allow to air dry.

b. Multimeter. Clean display window with lens tissue paper (item 3, appendix E) only. Clean remaining exterior surfaces by wiping with a cloth moistened with soap and water. Do not use abrasive materials, dirty cloths, or harsh cleansers.

c. Current Shunt. Wipe exterior with a cloth moistened with soap and water; then allow to air dry.

d. High Voltage Probe.

WARNING

To prevent shock hazard, do not immerse high voltage probe or allow moisture to enter interior. Do not use chemical solvents to clean plastic area of probe.

Adequate ventilation should be provided while using TRICHLOROTRIFLUOROETHANE. Prolonged breathing of vapor should be avoided. Do not use near heat or open flame; the products of decomposition are toxic and irritating. Since TRICHLOROTRIFLUOROETHANE dissolves natural oils, prolonged contact with the skin should be avoided. When necessary, use gloves, sleeves, and aprons which the solvent cannot penetrate. If the solvent is taken internally, consult a physician immediately.

Pull spring clip from probe tip with a clockwise twisting motion. Then clean metal probe tip and spring clip with trichlorotrifluoroethane (item 1, appendix E). Clean probe body with a soft cloth dampened with a mixture of five parts mild detergent and 95 parts water. Rinse with a cloth dampened with clean water and allow to air dry thoroughly before use.

e. Test Leads and Alligator Clips.

CAUTION

To prevent equipment damage, do not use chemical solvents to clean nonmetallic portions of test lead or alligator clip.

Pull metal alligator clips from insulating boots; then clean metal test lead tips and alligator clips with trichlorotrifluoroethane (item 1, appendix E). Clean insulating boots and test leads with a soft cloth dampened with a mixture of five parts mild detergent and 95 parts water. Rinse with a cloth dampened with clean water and allow to air dry thoroughly before use.

CHAPTER 4

ORGANIZATIONAL MAINTENANCE

CHAPTER OVERVIEW

The purpose of this chapter is to give you all needed instructions and additional information to help you at the organizational level keep the equipment in good repair.

	Paragraph
Common Tools and Equipment	4-1
Special Tools, TMDE, and Support Equipment	4-2
Repair Parts	4-3
Placing in Service	4-4
Unpacking	4-5
Introduction (Troubleshooting)	4-6
Troubleshooting Symptom Index	4-7
Troubleshooting Table	4-8
Battery Replacement	4-9
Fuse Replacement	4-10
Preparation for Storage	4-11
Preparation for Shipment	4-12

Section I. REPAIR PARTS, SPECIAL TOOLS, TMDE, AND SUPPORT EQUIPMENT

4-1. COMMON TOOLS AND EQUIPMENT

For authorized common tools and equipment, refer to the Modified Table of Organization and Equipment (MTOE) applicable to your unit.

4-2. SPECIAL TOOLS, TMDE, AND SUPPORT EQUIPMENT

No special tools or support equipment are required for organizational maintenance of the AN/PSM-45.

4-3. REPAIR PARTS

Repair parts are listed and illustrated in the repair parts and special tools list (TM 11-6625-3052-24P) covering organizational maintenance for this equipment.

Section II. SERVICE UPON RECEIPT

4-4. PLACING IN SERVICE

This task gives procedures for placing AN/PSM-45 in service.

INITIAL SETUP

Tools

Tool Kit, Electronic Equipment TK-101/G Screwdriver, flat tip	NSN 5180-00-064-5178
Safety glasses	NSN 5210-00-529-1205

Materials/Parts

Trichlorotrifluoroethane	Item 1, Appendix E
Clean cloths	Item 2, Appendix E

Equipment Condition

AN/PSM-45 packed in shipping container.

LIST OF TASKS

Task No.	Task	Task Ref.
1.	Unpack and inspect AN/PSM-45.	4-5
2.	Remove multimeter rear cover.	4-9
3.	Remove two foam blocks from battery holder, and install in cutouts of carrying case base.	4-11
4.	Install multimeter battery.	4-9
5.	Perform operational check.	3-2

4-5. UNPACKING

This task covers unpacking and inspection.

INITIAL SETUP

Equipment Condition

AN/PSM-45 packed in shipping container.

KEY

1. Corrugated carton
2. Carrying case
3. Multimeter
4. High voltage probe
5. Current shunt
6. Test leads (2)
7. Alligator clips (2)

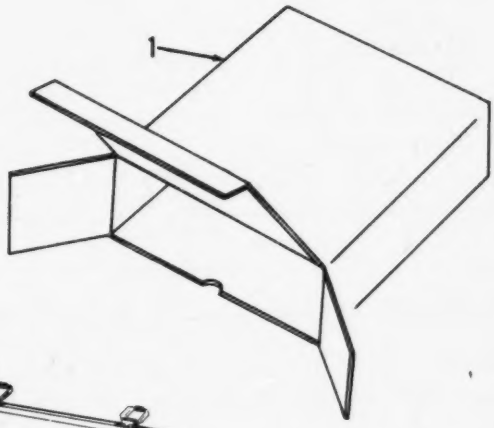

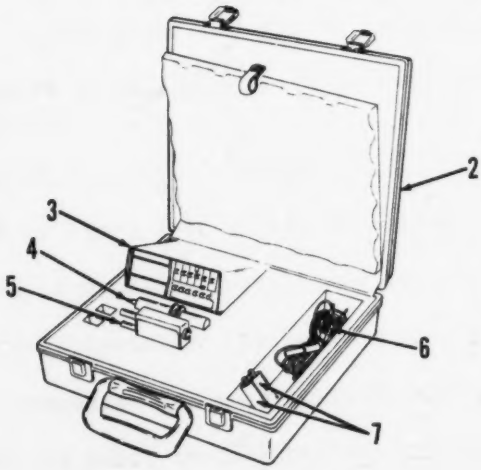

4-5. UNPACKING (Continued)

Step	Location	Item	Action	Remarks
UNPACKING				
1	Corrugated carton (1)	a. Corrugated carton (1)	Open	
		b. Carrying case (2)	Remove	From corrugated carton (1)
2	Carrying case (2)	a. Carrying case (2) lid	Open	Pull two latches out and raise lid
		b. Multimeter (3) and components (4 through 7)	a. Remove	Lift from cutouts in foam base
			b. Unpack	Remove protective plastic wrapping
INSPECTION				
3	AN/PSM-45	a. Corrugated carton (1)	Inspect	For tears, cuts, and damage. Discard a damaged carton. Save undamaged carton for use in future shipment
		b. Multimeter (3) and components (4 through 7)	a. Inspect	For damage incurred during shipment. If equipment is damaged, report damage on SF 364, Report of Discrepancy (ROD)
			b. Inventory	Check against packing slip to see if shipment is complete. Report all discrepancies in accordance with instructions of TM 38-750
			c. Check	To see whether equipment has been modified

Section III. TROUBLESHOOTING

4-6. INTRODUCTION

a. General. This section gives you instructions on how to troubleshoot problems which can be corrected at the organizational maintenance level. You should perform the tests/inspections and corrective actions in the order listed.

b. Scope. This section cannot list all malfunctions that may occur, nor all tests or inspections and corrective actions. If a malfunction is not listed or is not corrected by listed corrective actions, notify your supervisor.

4-7. TROUBLESHOOTING SYMPTOM INDEX

Symptom	Para/ Malfunction	Page
MULTIMETER		
Displays "B" symbol	4-8/1	4-5
Display blank	4-8/2	4-5
Display faded	4-8/3	4-6
Current functions inoperative (other functions okay)	4-8/4	4-6

4-8. TROUBLESHOOTING

MALFUNCTION
TEST OR INSPECTION
CORRECTIVE ACTION

1. MULTIMETER DISPLAYS "B" SYMBOL

Install new battery (para 4-9), turn multimeter on, and observe display.

a. If "B" symbol is not displayed and multimeter operates normally, problem was defective battery. No further action is required.

b. If multimeter still displays "B" symbol, notify next higher level of maintenance.

2. DISPLAY BLANK WITH POWER ON

Step 1. Remove rear cover (para 4-9) to see if battery is installed.

a. If battery is missing, install new battery (para 4-9).

b. If battery is installed, proceed to step 2 below.

Step 2. Check battery connector for good contact with battery terminals.

a. If contact is poor, install battery connector correctly (para 4-9).

b. If contact is good, proceed to step 3 below.

4-8. TROUBLESHOOTING (Continued)

MALFUNCTION
TEST OR INSPECTION
CORRECTIVE ACTION

2. DISPLAY BLANK WITH POWER ON (Continued)

Step 3. Remove battery connector from battery terminals (para 4-9). Inspect connector and battery terminals for corrosion, dirt, or foreign matter.

a. If foreign matter is present, remove it. If terminals are dirty, clean (para 4-9).

b. If terminals are okay, notify next higher level of maintenance.

3. MULTIMETER DISPLAY FADED

Step 1. Remove rear cover (para 4-9) and check battery connector for good contact with battery terminals.

a. If contact is poor, install battery connector correctly (para 4-9).

b. If contact is good, proceed to step 2 below.

Step 2. Remove battery connector from battery terminals (para 4-9). Inspect connector and battery terminals for corrosion, dirt, or foreign matter.

a. If foreign matter is present, remove it. If terminals are dirty, clean (para 4-9).

b. If terminals are okay, install new battery. If display is still faded, notify next higher level of maintenance.

4. MULTIMETER CURRENT FUNCTIONS INOPERATIVE (OTHER FUNCTIONS OKAY)

Step 1. Connect test leads between V-ohms and mA input jacks.
Set multimeter switches as follows: POWER - ON
Function - Ohms
Range - 2k

Observe multimeter display.

a. If multimeter displays overrange, a fuse is probably blown. Proceed to step 2 below.

b. If multimeter displays about ".100" the fuses are okay. Notify next higher level of maintenance.

4-8. TROUBLESHOOTING (Continued)

MALFUNCTION
TEST OR INSPECTION
CORRECTIVE ACTION

4. MULTIMETER CURRENT FUNCTIONS INOPERATIVE (OTHER FUNCTIONS OKAY) (Continued)

WARNING

For continued fire protection, replace fuses with same types and ratings only. Incorrect fuses can endanger operator when working with high voltage, high power circuits.

Step 2. Remove fuse F1 (para 4-10) and test for continuity.

a. If fuse F1 is open, replace with new fuse having same rating (para 4-10).

b. If fuse F1 is okay, reinstall it (para 4-10) and proceed to step 3 below.

Step 3. Remove fuse F2 (para 4-10) and test for continuity.

a. If fuse F2 is open, replace with new fuse of correct rating (para 4-10).

b. If fuse F2 is okay, reinstall it (para 4-10) and notify next higher level of maintenance.

Section IV. MAINTENANCE PROCEDURES

4-9. BATTERY REPLACEMENT

This task covers removal and installation of multimeter rear cover and battery.

INITIAL SETUP

Tools

Tool Kit, Electronic Equipment TK-101/G	NSN 5180-00-064-5178
Screwdriver, flat tip	
Safety glasses	NSN 5210-00-529-1205

Materials/Parts

Trichlorotrifluoroethane	Item 1, Appendix E
Clean cloths	Item 2, Appendix E
Battery, 9-volt	Item 1, Appendix D

Equipment Condition

Multimeter POWER switch OFF. Test leads disconnected.

KEY

1. Captive screws (2)
2. Rear cover
3. Battery
4. Battery connector
5. Multimeter

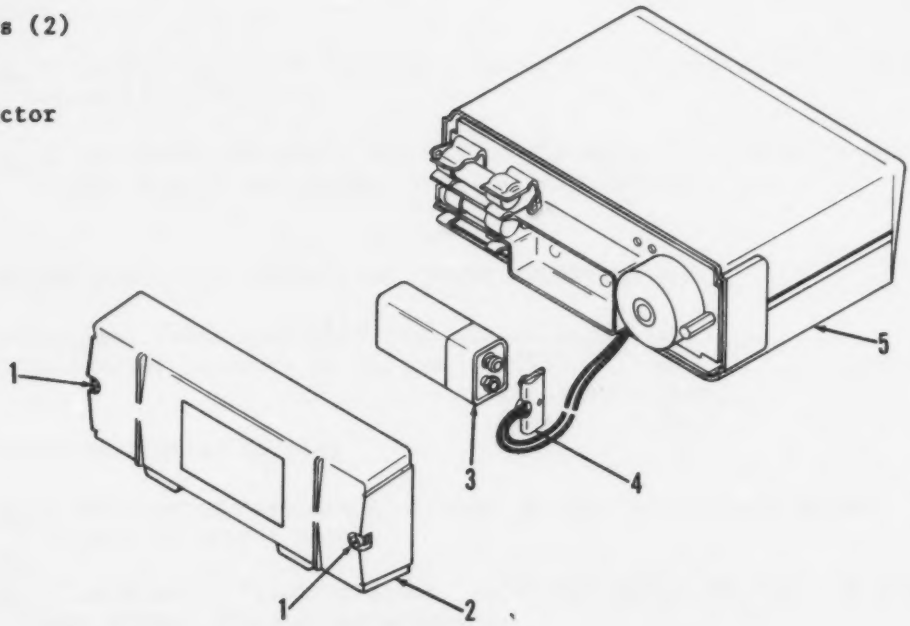

4-9. BATTERY REPLACEMENT (Continued)

Step	Location	Item	Action	Remarks
REMOVAL				
1	Multimeter (5), rear	a. Two captive screws (1)	Loosen	Turn counterclockwise until loose; do not attempt to remove from rear cover (2).
		b. Rear cover (2)	Remove	Pull from rear of multimeter.
		c. Battery (3)	Remove	Gently pry out of battery holder.
		d. Battery connector (4)	Disconnect	Pull from battery terminals.
		e. Battery (3)	Discard	If unserviceable
CLEANING				

WARNING

Adequate ventilation should be provided while using TRICHLOROTRIFLUOROETHANE. Prolonged breathing of vapor should be avoided. Do not use near heat or open flame; the products of decomposition are toxic and irritating. Since TRICHLOROTRIFLUOROETHANE dissolves natural oils, prolonged contact with the skin should be avoided. When necessary, use gloves, sleeves, and aprons which the solvent cannot penetrate. If the solvent is taken internally, consult a physician immediately.

2		a. Battery connector (4) terminals	Clean	Use lint-free cloth moistened with trichlorotrifluoroethane; wipe dry with clean cloth.

WARNING

Compressed air shall not be used for cleaning purposes except where reduced to less than 29 pounds per square inch (psi) and then only with effective chip guarding and personnel protective equipment. Do not use compressed air to dry parts when TRICHLOROTRIFLUOROETHANE has been used. Compressed air is dangerous and can cause serious bodily harm if protective means or methods are not observed to prevent chip or particle (of whatever size) from being blown into the eyes or unbroken skin of the operator or other personnel.

		b. Rear cover (2) and rear of multimeter (5)	Clean	Remove dirt and dust with dry, compressed air at no more than 29 psi.

4-9. BATTERY REPLACEMENT (Continued)

Step	Location	Item	Action	Remarks
INSTALLATION				
3	Multimeter (5), rear	a. Battery connector (4)	Connect	Align connector and battery terminals; then press connector onto battery terminals.
		b. Battery (3)	Install	Place battery with connector into battery compartment.
		c. Rear cover (2)	Position	At rear of multimeter, with rubber feet at bottom.
		d. Two captive screws (1)	Tighten	Until snug, to secure rear cover (2).
TEST				
4	Multimeter (5), front	Multimeter (5)	Check operation	See paragraph 3-2.

4-10. FUSE REPLACEMENT

This task covers removal and installation of fuses.

INITIAL SETUP

Tools

Tool Kit, Electronic Equipment TK-101/G — NSN 5180-00-064-5178
Screwdriver, flat tip

Materials/Parts

Trichlorotrifluoroethane — Item 1, Appendix E
Clean cloths — Item 2, Appendix E
Fuse F1, 2 ampere, 250 volts — Item 2, Appendix D
Fuse F2, 3 ampere, 600 volts — Item 3, Appendix D

Equipment Condition

Multimeter rear cover removed (para 4-9).

4-10. FUSE REPLACEMENT (Continued)

KEY

1. Spare fuse
2. Spare fuse
3. Fuse F1
4. Fuse F2
5. Multimeter

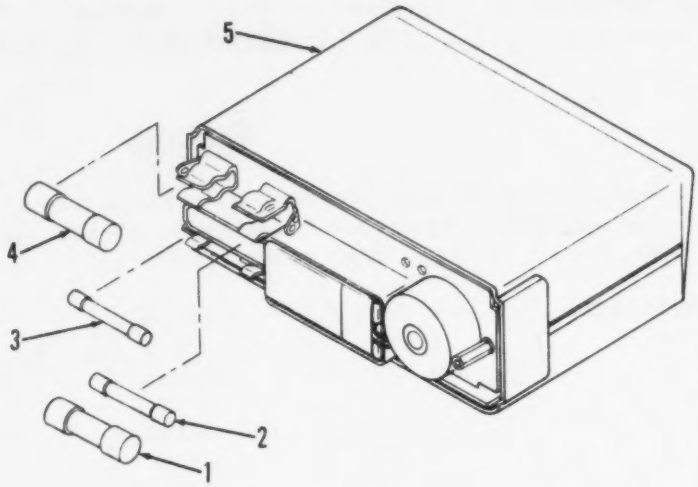

Step	Location	Item	Action	Remarks
REMOVAL				
1	Multimeter (5), rear	a. Two spare fuses (1 and 2)	Remove	Pull from battery holder.
		b. Fuse F1 (3)	Remove	Gently pry from bottom fuse clips with screwdriver tip.
		c. Fuse F2 (4)	Remove	Gently pry from top fuse clips with screwdriver tip.
CLEANING				

WARNING

Adequate ventilation should be provided while using TRICHLOROTRIFLUOROETHANE. Prolonged breathing of vapor should be avoided. Do not use near heat or open flame; the products of decomposition are toxic and irritating. Since TRICHLOROTRIFLUOROETHANE dissolves natural oils, prolonged contact with the skin should be avoided. When necessary, use gloves, sleeves, and aprons which the solvent cannot penetrate. If the solvent is taken internally, consult a physician immediately.

2		Fuse clips	Clean	Use lint-free cloth moistened with trichlorotrifluoroethane; wipe dry with clean cloth.

4-10. FUSE REPLACEMENT (Continued)

Step	Location	Item	Action	Remarks
INSTALLATION				
		WARNING For continued fire protection, replace fuses with same types and ratings only. Incorrect fuses can endanger operator when working with high voltage, high power circuits.		
3	Multimeter, rear	a. New fuse F2 (4)	Install	Press ends into top fuse clips.
		b. New fuse F1 (3)	Install	Press ends into bottom fuse clips.
		c. Spare fuses (1 and 2)	Install	Push into battery holder, small fuse (2) first.
		d. Rear cover	Install	See paragraph 4-9.
TEST				
4	Multimeter (5), front	Multimeter (5)	Check operation	See pagagraph 3-2.

Section V. PREPARATION FOR STORAGE OR SHIPMENT

4-11. PREPARATION FOR STORAGE

This task gives procedures required for AN/PSM-45 storage.

INITIAL SETUP

Materials/Parts

Waterproof tape	Item 4, Appendix E
Plastic film	Item 5, Appendix E

Equipment Condition

Battery removed from multimeter (para 4-9).
Spare fuses installed (para 4-10).

KEY

1. Foam blocks (2)
2. Carrying case
3. Multimeter
4. High voltage probe
5. Current shunt
6. Test leads (2)
7. Alligator clips (2)

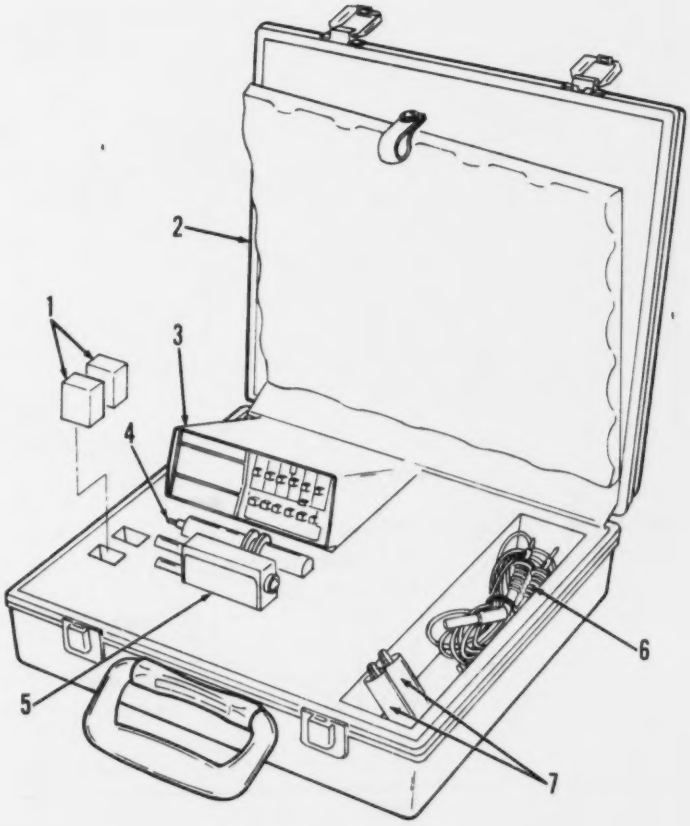

4-11. PREPARATION FOR STORAGE (Continued)

Step	Location	Item	Action	Remarks
PREPARING AN/PSM-45 FOR STORAGE				
1	Carrying case (2)	Two foam blocks (1)	Remove	Pull from carrying case base.
2	Multimeter (3), rear	a. Battery connector	Position	In battery holder as shown below
		b. Two foam blocks (1)	Install	Push into empty battery holder (2) as shown above to secure spare fuses and battery connector.
		c. Rear cover	Install	See paragraph 4-9.
3	Carrying case (2)	a. Multimeter (3) and components (4 thru 7)	a. Pack	Wrap each item in plastic film; then seal with waterproof tape.
			b. Install	Press into cutouts in foam base.
		b. Carrying case (2) lid	Close and latch	

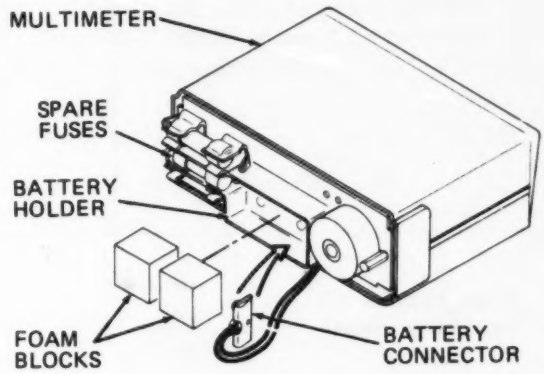

4-12. PREPARATION FOR SHIPMENT

This task gives procedures required for AN/PSM-45 shipment.

INITIAL SETUP

Materials/Parts

Corrugated carton	FSCM 55026 PN 06-112811
Shipping carton	FSCM 81348 PPP-B-636

Equipment Condition

AN/PSM-45 prepared for storage (para 4-11).

KEY

1. Corrugated carton
2. AN/PSM-45
3. Shipping carton

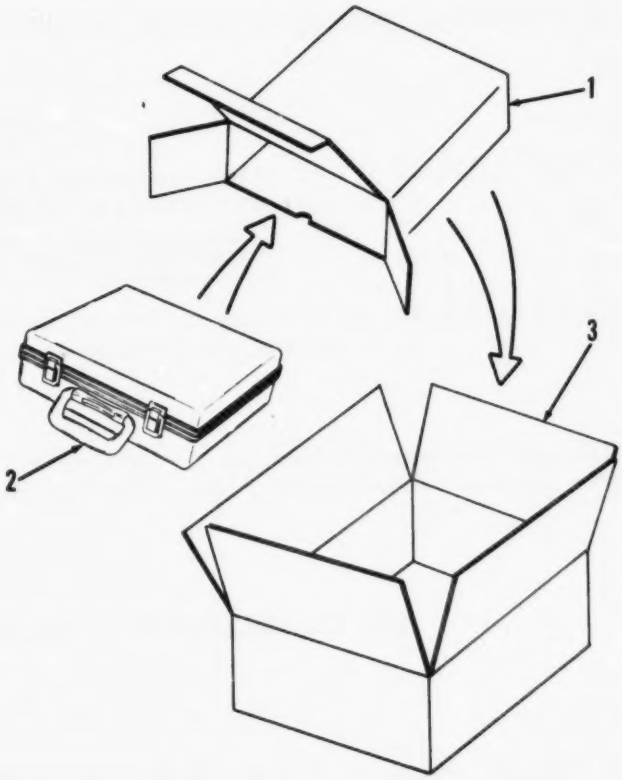

4-12. PREPARATION FOR SHIPMENT (Continued)

Step	Location	Item	Action	Remarks
PREPARING AN/PSM-45 FOR SHIPMENT				
1	Corrugated carton (1)	a. End flaps	Open	Use original corrugated carton if available and undamaged. Use new carton if necessary.
		b. AN/PSM-45 (2)	Install	In corrugated carton; then close end flaps.
		c. Corrugated carton (1)	a. Pack	Surround with resilient packing material.
			b. Install	In original shipping carton (3) if undamaged. Use new carton if necessary.
2	Shipping carton (3)	End flaps	Close and seal	

CHAPTER 6

GENERAL SUPPORT MAINTENANCE

CHAPTER OVERVIEW

The purpose of this chapter is to give you all needed instructions and additional information to help you calibrate and test the equipment at the general support level.

	Paragraph
Common Tools and Equipment	6-1
Special Tools, TMDE, and Support Equipment	6-2
Repair Parts	6-3
Troubleshooting	6-4
Calibration	6-5
Performance Tests	6-6

Section I. REPAIR PARTS, SPECIAL TOOLS, TMDE, AND SUPPORT EQUIPMENT

6-1. COMMON TOOLS AND EQUIPMENT

For authorized common tools and equipment, refer to the Modified Table of Organization and Equipment (MTOE) applicable to your unit.

6-2. SPECIAL TOOLS, TMDE, AND SUPPORT EQUIPMENT

Refer to the maintenance allocation chart (appendix B) for tools and test equipment to be used at the general support maintenance level.

6-3. REPAIR PARTS

Repair parts are listed and illustrated in the repair parts and special tool list (TM 11-6625-3052-24P) covering general support maintenance for this equipment.

Section II. TROUBLESHOOTING

6-4. TROUBLESHOOTING

No general support troubleshooting is authorized or required. Discard at failure if equipment will not calibrate or does not pass performance tests.

Section III. MAINTENANCE PROCEDURES

6-5. CALIBRATION

Perform the calibration procedures in TB 9-6625-2110-35 to correct any inaccuracy in multimeter measurements. Discard the multimeter at failure of any calibration procedure.

6-6. PERFORMANCE TESTS

After satisfactory calibration, compare the digital multimeter performance with the list of specifications given in paragraph 1-11 using the test procedures in TB 9-6625-2110-35. Discard the multimeter if it fails to meet any listed specification.

APPENDIX A
REFERENCES

A-1. SCOPE

This appendix lists all forms and publications referenced in this manual.

A-2. FORMS

DA Form 2028-2	Recommended Changes to Equipment Technical Publications
DA Form 2404	Equipment Inspection and Maintenance Work Sheet
SF 361	Discrepancy in Shipment Report (DISREP)
SF 364	Report of Discrepancy (ROD)
SF 368	Quality Deficiency Report

A-3. PUBLICATIONS

DA Pam 310-1	Consolidated Index of Army Publications and Blank Forms
FM 21-11	First Aid for Soldiers
TB 9-6625-2110-35	Calibration Procedure for Digital Multimeter AN/PSM-45 (Simpson Model 467)
TB 385-4	Safety Precautions for Maintenance of Electrical/Electronic Equipment
TM 11-6625-3052-24P	Organizational, Direct Support, and General Support Maintenance Repair Parts and Special Tools List for Multimeter, Digital AN/PSM-45
TM 38-750	The Army Maintenance Management System (TAMMS)
TM 750-244-2	Procedures for Destruction of Electronics Materiel to Prevent Enemy Use (Electronics Command)

APPENDIX B
MAINTENANCE ALLOCATION

Section I. INTRODUCTION

B-1. GENERAL

This appendix provides a summary of the maintenance operations for Multimeter, Digital AN/PSM-45. It authorizes categories of maintenance for specific maintenance functions on repairable items and components and the tools and equipment required to perform each function. This appendix may be used as an aid in planning maintenance operations.

B-2. MAINTENANCE FUNCTIONS

Maintenance functions will be limited to and defined as follows:

a. Inspect. To determine the serviceability of an item by comparing its physical, mechanical, and/or electrical characteristics with established standards through examination (i.e., by sight, sound, or feel).

b. Test. To verify serviceability by measuring the mechanical or electrical characteristics of an item and comparing those characteristics with prescribed standards.

c. Service. Operations required periodically to keep an item in proper operating condition, i.e., to clean (includes decontaminate, when required), to preserve, to drain, to paint, or to replenish fuel, lubricants, chemical fluids, or gases.

d. Adjust. To maintain or regulate, within prescribed limits, by bringing into proper or exact position, or by setting the operating characteristics to specified parameters.

e. Align. To adjust specified variable elements of an item to bring about optimum or desired performance.

f. Calibrate. To determine and cause corrections to be made or to be adjusted on instruments or test, measuring, and diagnostic equipments used in precision measurement. Consists of comparisons of two instruments, one of which is a certified standard of known accuracy, to detect and adjust any discrepancy in the accuracy of the instrument being compared.

B-2. MAINTENANCE FUNCTIONS (Continued)

g. Remove/Install. To remove and install the same item when required to perform service or other maintenance functions. Install may be the act of emplacing, seating, or fixing into position a spare, repair part, or module (component or assembly) in a manner to allow the proper functioning of an equipment or system.

h. Replace. To remove an unserviceable item and install a serviceable counterpart in its place. "Replace" is authorized by the MAC and is shown as the 3rd position code of the SMR code.

i. Repair. The application of maintenance services or other maintenance actions to restore serviceability to an item by correcting specific damage, fault, malfunction, or failure in a part, subassembly, module (component or assembly), end item, or system.

j. Overhaul. That maintenance effort (service/action) prescribed to restore an item to a completely serviceable/operational condition as required by maintenance standards in appropriate technical publications (i.e., DMWR). Overhaul is normally the highest degree of maintenance performed by the Army. Overhaul does not normally return an item to like new condition.

k. Rebuild. Consists of those services/actions necessary for the restoration of unserviceable equipment to a like new condition in accordance with original manufacturing standards. Rebuild is the highest degree of materiel maintenance applied to Army equipment. The rebuild operation includes the act of returning to zero those age measurements (hours/miles, etc.) considered in classifying Army equipment/components.

B-3. EXPLANATION OF COLUMNS IN THE MAC, SECTION II

a. Column 1 - Group Number. Column 1 lists functional group code numbers, the purpose of which is to identify maintenance significant components, assemblies, subassemblies, and modules with the next higher assembly.

b. Column 2 - Component/Assembly. Column 2 contains the names of components, assemblies, subassemblies, and modules for which maintenance is authorized.

c. Column 3 - Maintenance Function. Column 3 lists the functions to be performed on the item listed in Column 2. (For detailed explanation of these functions, see paragraph B-2.)

d. Column 4 - Maintenance Category. Column 4 specifies, by the listing of a work time figure in the appropriate subcolumn(s), the category of maintenance authorized to perform the function listed in Column 3. This figure represents the active time required to perform that maintenance function at the indicated category of maintenance. If the number or complexity of the tasks within the listed maintenance function vary at different maintenance categories, appropriate work time figures will be shown for each category. The work time figure represents the average time required to restore an item (assembly, subassembly, component, module, end item, or system) to a serviceable condition under typical field operating conditions. This time includes preparation time (including any necessary disassembly/assembly time), troubleshooting/fault location time, and quality assurance/quality control time in

B-3. EXPLANATION OF COLUMNS IN THE MAC, SECTION II (Continued)

addition to the time required to perform the specific tasks identified for the maintenance functions authorized in the maintenance allocation chart. The symbol designations for the various maintenance categories are as follows:

C ..... Operator/crew
O ..... Organizational maintenance
F ..... Direct support maintenance
H ..... General support maintenance

e. Column 5 - Tools and Equipment. Column 5 specifies, by code, those common tool sets (not individual tools) and special tools, TMDE, and support equipment required to perform the designated function.

f. Column 6 - Remarks. This column shall, when applicable, contain a letter code, in alphabetic order, which shall be keyed to the remarks contained in Section IV.

B-4. EXPLANATION OF COLUMNS IN TOOL AND TEST EQUIPMENT REQUIREMENTS, SECTION III

a. Column 1 - Reference Code. The tool and test equipment reference code correlates with a code used in the MAC, Section II, Column 5.

b. Column 2 - Maintenance Category. The lowest category of maintenance authorized to use the tool or test equipment.

c. Column 3 - Nomenclature. Name or identification of the tool or test equipment.

d. Column 4 - National Stock Number. The National stock number of the tool or test equipment.

e. Column 5 - Tool Number. The manufacturer's part number.

B-5. EXPLANATION OF COLUMNS IN REMARKS, SECTION IV

a. Column 1 - Reference Code. The code recorded in column 6, Section II.

b. Column 2 - Remarks. This column lists information pertinent to the maintenance function being performed as indicated in the MAC, Section II.

Section II. MAINTENANCE ALLOCATION CHART FOR MULTIMETER, DIGITAL AN/PSM-45

(1) GROUP NUMBER	(2) COMPONENT/ ASSEMBLY	(3) MAINTENANCE FUNCTION	(4) MAINTENANCE CATEGORY					(5) TOOLS AND EQPT.	(6) REMARKS
			C	O	F	H	D		
00	MULTIMETER, DIGITAL AN/PSM-45	Inspect	0.1						
01	DIGITAL MULTIMETER (55026) 10-864999	Inspect	0.1						
		Repair		0.2				1, 2	A
		Repair				0.5			B
02	HIGH VOLTAGE PROBE (55026) 10-830844	Inspect	0.1						
		Repair				0.2			C

Section III. TOOL AND TEST EQUIPMENT REQUIREMENTS FOR MULTIMETER, DIGITAL AN/PSM-45

TOOL OR TEST EQUIPMENT REF CODE	MAINTENANCE CATEGORY	NOMENCLATURE	NATIONAL/ NATO STOCK NUMBER	TOOL NUMBER
1	O	TOOL KIT, ELECTRONIC EQUIPMENT TK-101/G	5180-00-064-5178	
2	O	MULTIMETER, DIGITAL AN/PSM-45	6625-01-139-2512	

Section IV. REMARKS

Reference Code	Remarks
A	Repair by replacing battery, fuses, and/or test leads.
B	Repair by calibration only. Refer to TB 9-6625-2110-35.
C	Repair by replacement only.

APPENDIX C

COMPONENTS OF END ITEM AND BASIC ISSUE ITEMS LISTS

Section I. INTRODUCTION

C-1. SCOPE

This appendix lists components of end item and basic issue items for Multimeter, Digital AN/PSM-45 to help you inventory items required for safe and efficient operation.

C-2. GENERAL

The Components of End Item and Basic Issue Items Lists are divided into the following sections:

a. Section II - Components of End Item. This listing is for informational purposes only, and is not authority to requisition replacements. These items are part of the end item, but are removed and separately packaged for transportation or shipment. As part of the end item, these items must be with the end item whenever it is issued or transferred between property accounts. Illustrations are furnished to assist you in identifying the items.

b. Section III - Basic Issue Items. These are the minimum essential items required to place the AN/PSM-45 in operation, to operate it, and to perform emergency repairs. Although shipped separately packaged BII must be with the AN/PSM-45 during operation and whenever it is transferred between property accounts. The illustrations will assist you with hard-to-identify items. This manual is your authority to request/requisition replacement BII, based on TOE/MTOE authorization of the end item.

C-3. EXPLANATION OF COLUMNS

The following provides an explanation of columns found in the tabular listings:

a. Column 1 - Illustration Number (Illus Number). This column indicates the number of the illustration in which the item is shown.

b. Column 2 - National Stock Number. Indicates the National stock number assigned to the item and will be used for requisitioning purposes.

c. Column 3 - Description. Indicates the Federal item name and, if required, a minimum description to identify and locate the item. The last line for each item indicates the Federal Supply Code for Manufacturer (FSCM) in parentheses followed by the part number.

d. Column 4 - Unit of Measure (U/M). Indicates the measure used in performing the actual operational/maintenance function. This measure is expressed by a two-character alphabetical abbreviation (e.g., ea, in, pr).

e. Column 5 - Quantity Required (Qty rqr). Indicates the quantity of the item authorized to be used with/on the equipment.

Section II. COMPONENTS OF END ITEM

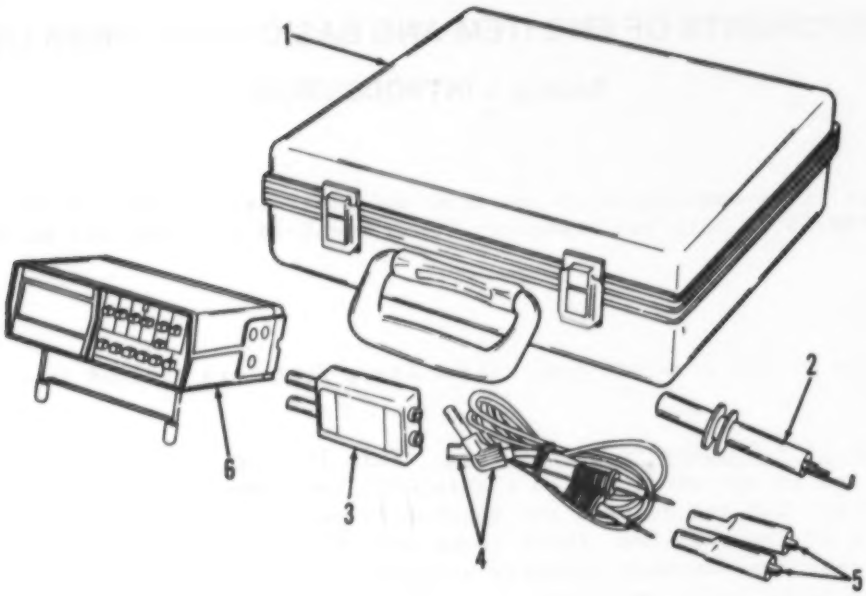

(1) Illus Number	(2) National Stock Number	(3) Description FSCM and Part Number	Usable On Code	(4) U/M	(5) Qty rqr
1		CASE, CARRYING (55026) 10-864945		EA	1
2		PROBE, HIGH VOLTAGE (55026) 10-830844		EA	1
3		CURRENT SHUNT ADAPTER (55026) 10-864941		EA	1
4		TEST LEAD SET (55026) 6-112092		EA	1
5		ALLIGATOR CLIP SET (55026) 10-864240		EA	1
6		MULTIMETER, DIGITAL (55026) 10-864999		EA	1

APPENDIX D

ADDITIONAL AUTHORIZATION LIST

Section I. INTRODUCTION

D-1. SCOPE

This appendix lists additional items you are authorized for the support of Multimeter, Digital AN/PSM-45.

D-2. GENERAL

This list identifies items that do not have to accompany the AN/PSM-45 and that do not have to be turned in with it. These items are all authorized to you by CTA, MTOE, TDA, or JTA.

D-3. EXPLANATION OF LISTING

National stock numbers, descriptions, and quantities are provided to help you identify and request the additional items you require to support this equipment. The items are listed in alphabetical sequence by item name under the type document (i.e., CTA, MTOE, TDA, or JTA) which authorizes the item(s) to you.

Section II. ADDITIONAL AUTHORIZATION LIST

(1) NATIONAL STOCK NUMBER	(2) DESCRIPTION FSCM & PART NUMBER	USABLE ON CODE	(3) U/M	(4) QTY AUTH
	MTOE AUTHORIZED ITEMS			
6135-00-900-2139	BATTERY, 9-VOLT, NEDA 1604A (90303) MN1604		EA	1
5920-00-280-5062	FUSE, 2 AMPERE, 250 VOLTS (75915) 312002		EA	1
5920-00-813-2714	FUSE, 3 AMPERE, 600 VOLTS (71400) BBS3		EA	1

APPENDIX E

EXPENDABLE SUPPLIES AND MATERIALS LIST

Section I. INTRODUCTION

E-1. SCOPE

This appendix lists expendable supplies and materials you will need to operate and maintain Multimeter, Digital AN/PSM-45. These items are authorized to you by CTA 50-970, Expendable Items (Except Medical, Class V, Repair Parts, and Heraldic Items).

E-2. EXPLANATION OF COLUMNS

a. Column 1 - Item Number. This number is assigned to the entry in the listing and is referenced in the narrative instructions to identify the material (e.g., "Use trichlorotrifluoroethane (item 1, appendix E).").

b. Column 2 - Level. This column identifies the lowest level of maintenance that requires the listed item. The symbol designations are as follows:

C ..... Operator/crew
O ..... Organizational maintenance
F ..... Direct support maintenance
H ..... General support maintenance

c. Column 3 - National Stock Number. This is the National stock number assigned to the item; use it to request or requisition the item.

d. Column 3 - Description. Indicates the Federal item name and, if required, a description to identify the item. The last line for each item indicates the Federal Supply Code for Manufacturer (FSCM) in parentheses followed by the part number.

e. Column 4 - Unit of Measure (U/M). Indicates the measure used in performing the actual maintenance function. This measure is expressed by a two-character alphabetical abbreviation (e.g., ea, in, pr). If the unit of measure differs from the unit of issue, requisition the lowest unit of issue that will satisfy your requirements.

Section II. EXPENDABLE SUPPLIES AND MATERIALS LIST

(1) Item Number	(2) Level	(3) National Stock Number	(4) Description	(5) U/M
1	C	6850-00-105-3084	TRICHLOROTRIFLUOROETHANE: Technical MIL-C-81302 (81349) 16 oz. can	EA
2	C	8305-00-222-2423	CLOTH: Lint-free MIL-C-13194 (81349)	EA
3	C	6640-00-975-9848	PAPER: Lens tissue UU-P-313 (81348)	EA
4	O	8135-00-634-3292	TAPE, PRESSURE SENSITIVE ADHESIVE: Waterproof PPP-T-0066, Type IV (81348)	EA
5	O	8135-00-058-6196	PLASTIC FILM: Polyethylene, thin gauge L-P-378 (81348)	EA

INDEX

Subject	Paragraph
A	
Abbreviations	1-8
Additional Authorization List	D-1
B	
Basic Issue Items	C-1
Battery Replacement	4-9
C	
Calibration	6-5
Capabilities and Features, Equipment	1-9b
Characteristics, Equipment	1-9a
Checkout, Operational	3-3
Cleaning	3-4
Common Tools and Equipment	4-1, 6-1
Components of End Item	C-1
Consolidated Index	1-2
Controls and Indicators, Description	2-2
Cross-Reference, Nomenclature	1-6
Current Shunt	
Cleaning	3-4c
Location and Description	1-10c
Operation	2-7f
Operational Checkout	3-3
Principles of Operation	1-14
D	
Data, Equipment	1-11
Decal, Operating Instructions	2-9
Description	
Major Components	1-10
Operator's Controls and Indicators	2-2
Destruction to Prevent Enemy Use	1-4
Display Description	2-2
E	
Equipment	
Additional Authorization List	D-1
Basic Issue Items List	C-1
Capabilities and Features	1-9b
Characteristics	1-9a
Cleaning	3-4
Components List	C-1

INDEX (continued)

Subject	Paragraph
E (continued)	
Equipment (continued)	
Data	1-11
Improvement Recommendations, Reporting	1-7
Model Number and Name	1-1b
Movement	2-8
Operation	2-7
Operational Checkout	3-3
Placing in Service	4-4
Purpose	1-1c
Unpacking and Inspection	4-5
Error Reporting	i
Expendable Supplies and Materials List	E-1
F	
Features and Capabilities, Equipment	1-9b
Forms and Records, Maintenance	1-3
Fuse Replacement	4-10
H	
High Voltage Probe	
Cleaning	3-4d
Location and Description	1-10b
Operation	2-7c
Operational Checkout	3-3
Principles of Operation	1-13
How to Use Manual	1-0
I	
Improvement Recommendations, Equipment, Reporting	1-7
Index, Consolidated	1-2
L	
Location and Description	
Controls and Indicators	2-2
Major Components	1-10
List	
Abbreviations	1-8
Additional Authorization	D-1
Basic Issue Items	C-1
Components of End Item	C-1
Expendable Supplies and Materials	E-1
Nomenclature Cross-Reference	1-6

INDEX (continued)

Subject	Paragraph
M	
Maintenance Allocation	B-1
Maintenance Forms, Records, and Reports	1-3
Manual	
How to Use	1-0
Type	1-1a
Major Components, Description and Location of	1-10
Materiel Destruction to Prevent Enemy Use	1-4
Measurements, Operating Procedure	
Absolute Value Pulse Detector	2-7k
AC Current	2-7e
AC Voltage	2-7b
Continuity	2-7h
Current Shunt	2-7f
DC Current	2-7d
DC Voltage	2-7a
Diode Test	2-7i
High Voltage Probe	2-7c
Peak Hold	2-7j
Resistance	2-7g
Movement, Preparation for	2-8
Multimeter	
Battery Replacement	4-9
Cleaning	3-4b
Controls and Indicators Description	2-2
Fuse Replacement	4-10
Location and Description	1-10f
Operation	2-7
Operational Checkout	3-3
Performance Tests	6-6
Principles of Operation	1-12
N	
Name and Model Number, Equipment	1-1b
Nomenclature, Names, and Designations	1-6
O	
Official Nomenclature, Names, and Designations	1-6
Operating Instructions Decal	2-9
Operating Procedure	
Absolute Value Pulse Detector Mode	2-7k
AC Current Measurements	2-7e
AC Voltage Measurements	2-7b
Continuity Measurements	2-7h
Current Shunt Measurements	2-7f
DC Current Measurements	2-7d
DC Voltage Measurements	2-7a

INDEX (continued)

Subject | Paragraph

O (continued)

Operating Procedure (continued)
Diode Test Mode 2-7i
High Voltage Probe Measurements 2-7c
Peak Hold Mode 2-7j
Resistance Measurements 2-7g
Operation, Principles of
Current Shunt 1-14
High Voltage Probe 1-13
Multimeter 1-12
Operational Checkout 3-3
Operator PMCS 2-4
Operator's Controls and Indicators 2-2

P

Parts, Repair 4-3, 6-3
Performance Tests 6-6
Placing Equipment in Service 4-4
PMCS, Operator 2-4
Preparation for
Movement 2-8
Shipment 4-12
Storage 4-11
Principles of Operation
Current Shunt 1-14
High Voltage Probe 1-13
Multimeter 1-12
Preventive Maintenance Checks and Services, Operator 2-4
Probe, High Voltage
Cleaning 3-4d
Location and Description 1-10b
Operation 2-7c
Operational Checkout 3-3
Principles of Operation 1-13
Purpose, Equipment 1-1c

R

Records and Forms, Maintenance 1-3
References A-1
Repair Parts 4-3, 6-3
Replacement
Battery 4-9
Fuses 4-10

INDEX (continued)

Subject	Paragraph
R (continued)	
Reporting	
Errors	i
Equipment Improvement Recommendations (EIRs)	1-7
Shipping Damage	4-5
S	
Safety Steps for Electrical Shock	inside front cover
Service Upon Receipt	4-4
Shipment	
Damage Reporting	4-5
Preparation for	4-12
Shunt, Current	
Cleaning	3-4c
Location and Description	1-10c
Operation	2-7f
Operational Checkout	3-3
Principles of Operation	1-14
Special Tools, TMDE, and Support Equipment	4-2, 6-2
Storage, Preparation for	4-11
Supplies and Materials, Expendable	E-1
T	
Test, Maintenance, and Diagnostic Equipment	4-2, 6-2
Tests, Performance	6-6
Theory of Operation	
Current Shunt	1-14
High Voltage Probe	1-13
Multimeter	1-12
TMDE	4-2, 6-2
Tools and Equipment	
Common	4-1, 6-1
Special	4-2, 6-2
Troubleshooting	
General Support	6-4
Operator	3-1
Organizational	4-6
U	
Unpacking and Inspection	4-5
Use of Manual	1-1
W	
Warning Page	A, B

☆U.S. GOVERNMENT PRINTING OFFICE: 1989 242-451/01653

RECOMMENDED CHANGES TO EQUIPMENT TECHNICAL PUBLICATIONS

THEN...JOT DOWN THE DOPE ABOUT IT ON THIS FORM, CAREFULLY TEAR IT OUT, FOLD IT AND DROP IT IN THE MAIL.

SOMETHING WRONG WITH THIS PUBLICATION?

FROM: (PRINT YOUR UNIT'S COMPLETE ADDRESS)
Commander
Stateside Army Depot
ATTN: AMSTA-US
Stateside, N.J. 07703

DATE SENT
10 July 1975

PUBLICATION NUMBER	PUBLICATION DATE	PUBLICATION TITLE
TM 11-5840-340-12	23 Jan 74	Radar Set AN/PRC-76

BE EXACT PIN-POINT WHERE IT IS

PAGE NO.	PARA-GRAPH	FIGURE NO.	TABLE NO.	IN THIS SPACE TELL WHAT IS WRONG AND WHAT SHOULD BE DONE ABOUT IT:
2-25	2-28			Recommend that the installation antenna alignment procedure be changed throughout to specify a 2° IFF antenna lag rather than 1°. REASON: Experience has shown that with only a 1° lag, the antenna servo system is too sensitive to wind gusting in excess of 25 knots, and has a tendency to rapidly accelerate and decelerate as it hunts, causing strain to the drive train. Hunting is minimized by adjusting the lag to 2° without degradation of operation.
3-10	3-3		3-1	Item 5, Function column. Change "2 db" to "3db." REASON: The adjustment procedure the the TRANS POWER FAULT indicator calls for a 3 db (500 watts) adjustment to light the TRANS POWER FAULT indicator.
5-6	5-8			Add new step f.1 to read, "Replace cover plate removed in step e.1, above." REASON: To replace the cover plate.
		F03		Zone C 3. On J1-2, change "+24 VDC to "+5 VDC." REASON: This is the output line of the 5 VDC power supply. +24 VDC is the input voltage.

SAMPLE

PRINTED NAME GRADE OR TITLE AND TELEPHONE NUMBER
SSG I. M. DeSpiritof 999-1776

SIGN HERE
SSG I. M. DeSpiritof

DA FORM 1 JUL 79 2028-2 PREVIOUS EDITIONS ARE OBSOLETE

P.S.--IF YOUR OUTFIT WANTS TO KNOW ABOUT YOUR RECOMMENDATION MAKE A CARBON COPY OF THIS AND GIVE IT TO YOUR HEADQUARTERS.

TEAR ALONG PERFORATED LINE

REVERSE OF DA FORM 2028-2

FILL IN YOUR UNIT'S ADDRESS

FOLD BACK

DEPARTMENT OF THE ARMY

POSTAGE AND FEES PAID
DEPARTMENT OF THE ARMY
DOD 314

U.S. MAIL

OFFICIAL BUSINESS
PENALTY FOR PRIVATE USE $300

SAMPLE

Commander
US Army Communications-Electronics Command
and Fort Monmouth
ATTN: DRSEL-ME-MP
Fort Monmouth, New Jersey 07703

TEAR ALONG PERFORATED LINE

RECOMMENDED CHANGES TO EQUIPMENT TECHNICAL PUBLICATIONS

THEN...JOT DOWN THE DOPE ABOUT IT ON THIS FORM. CAREFULLY TEAR IT OUT, FOLD IT AND DROP IT IN THE MAIL.

SOMETHING WRONG WITH THIS PUBLICATION?

FROM: (PRINT YOUR UNIT'S COMPLETE ADDRESS)

DATE SENT

PUBLICATION NUMBER	PUBLICATION DATE	PUBLICATION TITLE
TM 11-6625-3052-14	10 Jan 1984	Multimeter, Digital AN/PSM-45

BE EXACT PIN-POINT WHERE IT IS

PAGE NO.	PARA-GRAPH	FIGURE NO.	TABLE NO.

IN THIS SPACE TELL WHAT IS WRONG AND WHAT SHOULD BE DONE ABOUT IT:

PRINTED NAME GRADE OR TITLE AND TELEPHONE NUMBER

SIGN HERE

TEAR ALONG PERFORATED LINE

DA FORM 1 JUL 79 2028-2

PREVIOUS EDITIONS ARE OBSOLETE

P.S.--IF YOUR OUTFIT WANTS TO KNOW ABOUT YOUR RECOMMENDATION MAKE A CARBON COPY OF THIS AND GIVE IT TO YOUR HEADQUARTERS.

REVERSE OF DA FORM 2028-2

FILL IN YOUR UNIT'S ADDRESS

FOLD BACK

DEPARTMENT OF THE ARMY

POSTAGE AND FEES PAID
DEPARTMENT OF THE ARMY
DOD 314

U.S. MAIL

OFFICIAL BUSINESS
PENALTY FOR PRIVATE USE $300

Commander
US Army Communications-Electronics Command
and Fort Monmouth
ATTN: DRSEL-ME-MP
Fort Monmouth, New Jersey 07703

TEAR ALONG PERFORATED LINE

RECOMMENDED CHANGES TO EQUIPMENT TECHNICAL PUBLICATIONS

THEN...JOT DOWN THE DOPE ABOUT IT ON THIS FORM. CAREFULLY TEAR IT OUT, FOLD IT AND DROP IT IN THE MAIL.

SOMETHING WRONG WITH THIS PUBLICATION?

FROM: (PRINT YOUR UNIT'S COMPLETE ADDRESS)

DATE SENT

PUBLICATION NUMBER	PUBLICATION DATE	PUBLICATION TITLE
TM 11-6625-3052-14	10 Jan 1984	Multimeter, Digital AN/PSM-45

BE EXACT PIN-POINT WHERE IT IS

PAGE NO.	PARA-GRAPH	FIGURE NO.	TABLE NO.

IN THIS SPACE TELL WHAT IS WRONG AND WHAT SHOULD BE DONE ABOUT IT:

PRINTED NAME GRADE OR TITLE AND TELEPHONE NUMBER

SIGN HERE

TEAR ALONG PERFORATED LINE

DA FORM 1 JUL 79 2028-2

PREVIOUS EDITIONS ARE OBSOLETE

P.S.--IF YOUR OUTFIT WANTS TO KNOW ABOUT YOUR RECOMMENDATION MAKE A CARBON COPY OF THIS AND GIVE IT TO YOUR HEADQUARTERS.

REVERSE OF DA FORM 2028-2

FILL IN YOUR UNIT'S ADDRESS

FOLD BACK

DEPARTMENT OF THE ARMY

POSTAGE AND FEES PAID
DEPARTMENT OF THE ARMY
DOD 314

U.S. MAIL

OFFICIAL BUSINESS
PENALTY FOR PRIVATE USE $300

Commander
US Army Communications-Electronics Command
and Fort Monmouth
ATTN: DRSEL-ME-MP
Fort Monmouth, New Jersey 07703

TEAR ALONG PERFORATED LINE

RECOMMENDED CHANGES TO EQUIPMENT TECHNICAL PUBLICATIONS

THEN...JOT DOWN THE DOPE ABOUT IT ON THIS FORM. CAREFULLY TEAR IT OUT, FOLD IT AND DROP IT IN THE MAIL.

SOMETHING WRONG WITH THIS PUBLICATION?

FROM: (PRINT YOUR UNIT'S COMPLETE ADDRESS)

DATE SENT

PUBLICATION NUMBER	PUBLICATION DATE	PUBLICATION TITLE
TM 11-6625-3052-14	10 Jan 1984	Multimeter, Digital AN/PSM-45

BE EXACT PIN-POINT WHERE IT IS

PAGE NO.	PARA-GRAPH	FIGURE NO.	TABLE NO.

IN THIS SPACE TELL WHAT IS WRONG AND WHAT SHOULD BE DONE ABOUT IT:

PRINTED NAME GRADE OR TITLE AND TELEPHONE NUMBER

SIGN HERE

TEAR ALONG PERFORATED LINE

DA FORM 1 JUL 79 2028-2

PREVIOUS EDITIONS ARE OBSOLETE

P.S.--IF YOUR OUTFIT WANTS TO KNOW ABOUT YOUR RECOMMENDATION MAKE A CARBON COPY OF THIS AND GIVE IT TO YOUR HEADQUARTERS.

REVERSE OF DA FORM 2028-2

FILL IN YOUR UNIT'S ADDRESS

FOLD BACK

DEPARTMENT OF THE ARMY

POSTAGE AND FEES PAID
DEPARTMENT OF THE ARMY
DOD 314

U.S. MAIL

OFFICIAL BUSINESS
PENALTY FOR PRIVATE USE $300

Commander
US Army Communications-Electronics Command
and Fort Monmouth
ATTN: DRSEL-ME-MP
Fort Monmouth, New Jersey 07703

TEAR ALONG PERFORATED LINE

PIN: 054703-000